Libyan Journal of Science & Technology **8:1** (2018) 30–33

Faculty of Science - University of Benghazi

Libyan Journal of Science & Technology

journal home page: www.sc.uob.edu.ly/pages/page/77

A physical study of Libyan olive oil using a set of sensor

Noura R. Maznouk*, Sultana S. Abkatra, Rabeea B. Omar, Ghiath A. Almaarati

Department of Physics, Faculty of Arts and Sciences, University of Benghazi, Almarj.

Highlights

- **The set of sensors used showed a good repetition when exposed to the vapour of Libyan olive oil and a good response to the vapour of Libyan olive oil in a short time.**
- **We obtain a good and a clear stability after identifying the vapour of Libyan olive oil.**
- **A new parameter was found (fingerprint), special fingerprint of Libyan olive oil, to distinguish the mentioned oil from the rest of the oils of other countries.**

ARTICLE INFO

Article history:
Received 16 May 2018
Revised 22 September 2018
Accepted 29 September 2018
Available online 10 November 2018

Keywords:
Sensors set, Physical parameters, Sensitivity response, Sensitivity response velocity, Fingerprint sensor.

*Corresponding Author:

E-mail address: nouraemyazan@yahoo.com
N. R. Maznouk

ABSTRACT

In this research, a set of gas sensors (Tagushi Gas Sensors) which consist of three sensors [TGS2611- TGS2612-TGS2620] were used. This set was then exposed to the Libyan olive oil vapor to identify it and to derive the special physical parameters (R_0-S-SRV- t_r). We noticed that this set showed a very good response to olive oil vapor in a short time. The parameter FPS (Fingerprint Sensor) which is the most important physical parameter can be used to distinguish and/or investigate several kinds of vapors.

© 2018 University of Benghazi. All rights reserved.

1. Introduction:

Olive oil is one of the most important oils in the world, as it contains a low percentage of fatty saturated acids, so it is used profusely. The quality of olive oil can be determined by the fatty acids found in it. A good olive oil must contain a little fatty acid and volatile materials. We have found a physical method (which can be a common method of the usual chemical method) to identify several kinds of oils in general and the Libyan olive oil in particular.

Many researchers have formed a set of gas sensors to identify many kinds of oils. For example, Maznouk *et al.* (2009) were able to make gas sensors. These ensors were made of a pure tin oxide SnO_2 and a mixture of tin oxide and tungsten oxide (SnO_2: WO_3 = 50:50) to identify the Syrian olive oil. The researcher noticed that the sensors, which were made by different oxides, identified the Syrian olive oil faster than the sensors made of pure oxide. Dakkak *et al.* (2009) managed to form a set of gas sensors to distinguish between several kinds of Syrian olive oil in several regions of Syria. This set has shown an excellent ability to separate different kinds of Syrian olive oil. Moreover, Penza *et al.* (2000) formed a set of sensors consisting of four sensors used to distinguish between olive oil and corn oil.

2. Material and Methods

2.1. Gas Sensors (Tagushi Gas Sensor)

We dealed with three gas sensors (TGS2611-TGS2612-TGS2620), which were connected to each other to form the set used to identify the Libyan olive oil. The sensitive material contained in all sensors is made of (semiconductor). We chose these kinds of sensors because they have many specifications, including their low energy consumption, long working life, their price is cheap and the circuit characterization is easy to apply. Work has been divided into several stages:

2.2. Gas Sensors Characterization Circuits

Fig. 1 shows the Gas Sensors Characterization Circuits (2611, 2612, 2620), where V_C is the circuit voltage, V_H is the heater voltage and V_{RL} is the load resistance voltage.

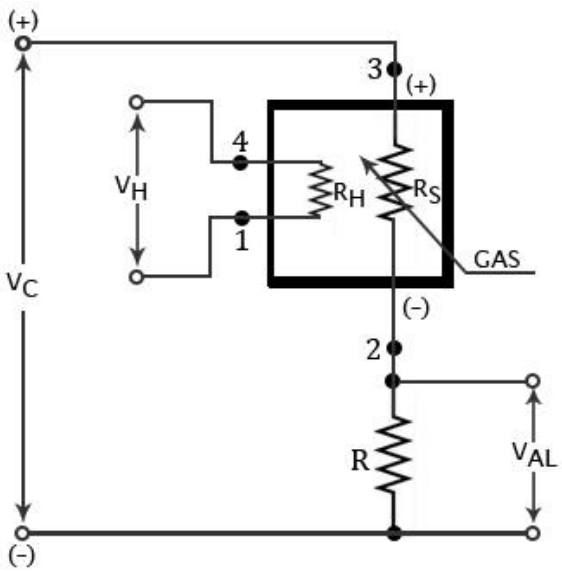

Fig. 1. Characterization circuit for sensors 2611-2612-2620

2.3. Connecting the circuits of sensor characterization with each other

All the sensor circuits are connected to each other to form a set that will be sensitive to the Libyan olive oil vapor. Fig. 2 shows the final circuit of this set, which is shown in Fig. 3.

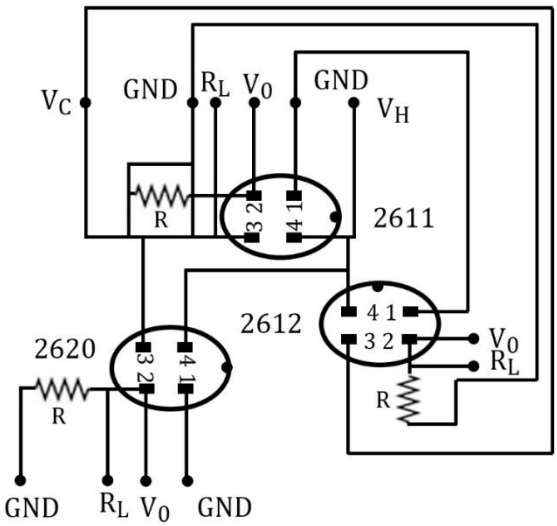

Fig .2. The final circuit of the sensors set

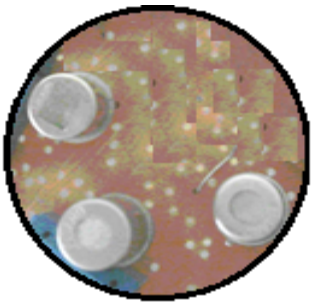

Fig. 3. The operation circuit of the gas sensors set

2.4. Method of olive oil vaporization

A small amount of olive oil was placed in an open surface container. The sensors set was then placed on the surface (Omar *et al*., 2003; Corcoran *et al*., 1994). The base was closed as shown in Fig. 4 and then a container was placed on a heating device at 50 °C to vapor the oil.

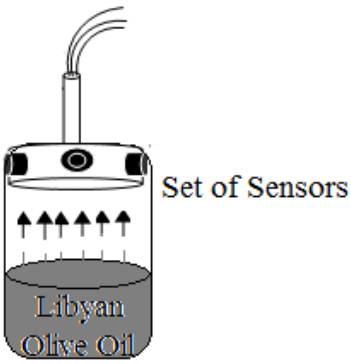

Fig. 4. Method of olive oil vaporization for the sensors set.

3. Results and Discussion:

3.1. Characterization of gas sensors:

It is known that when exposing a set of gas sensors to a reference vapor such as olive oil, the resistance of the sensors will decrease because the olive oil vapor molecules will react with the oxygen molecules that are addicted on the sensitive layer, thereby oxidizing and reducing oxygen contacts. The density of the free electrons in the sensitive material will increase. Thus, reducing the voltage barrier that obstructing the flow of electrons. This is leading to increasing the mobility and decreasing the resistance. Fig. 5 shows the decrease of resistance of the sensors with time when exposed to the vapor of olive oil.

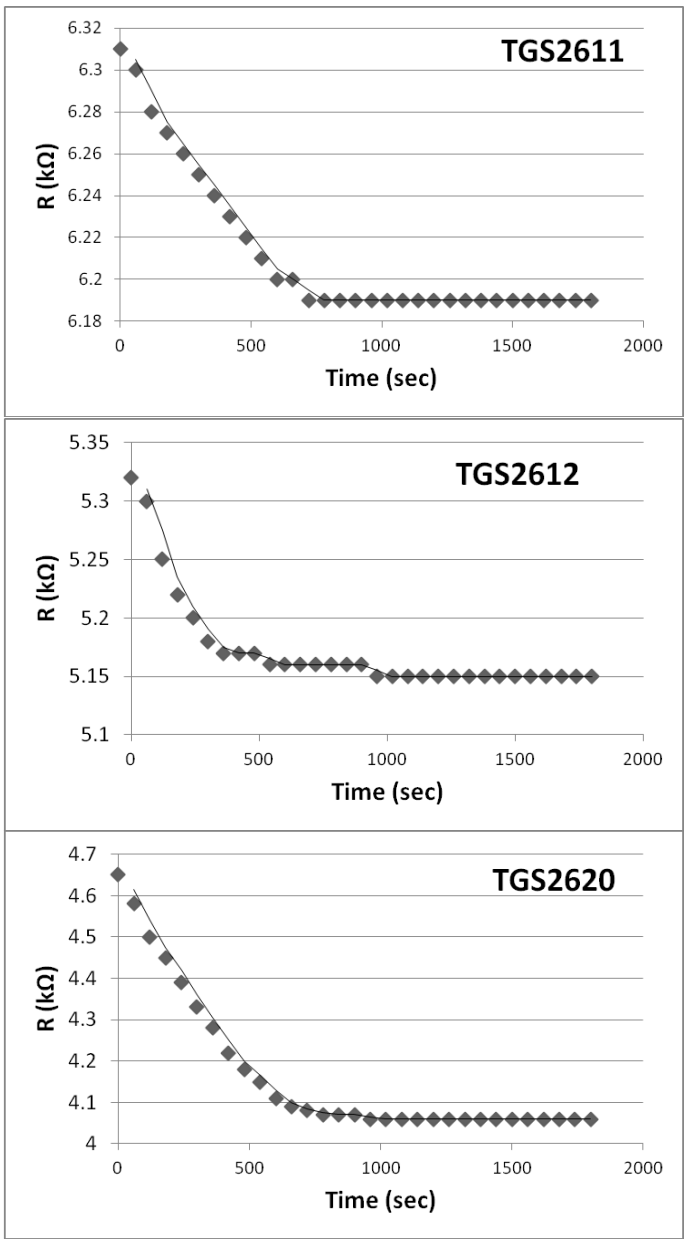

Fig. 5. The resistance of sensors against the exposed time

According to Fig. 5, one can obtain an equation in the form:

$$R = R_{t_0} + a.e^{\frac{-t}{b}} \quad (1)$$

Eq. (1) is an exponential formula that has special constants for each sensor (Table 1).

Table 1

Constants for the three sensors

Sensor	TGS2611	TGS2612	TGS2620
R_0 (kΩ)	6.31	5.32	4.65
a (kΩ)	-0.027	-0.063	-0.1289
b (sec)	-779.2	-1217.6	-788.3

3.2. Study of the physical parameters of the sensors set

Several physical parameters of the sensors set were studied and their detailed description is outlined below:

3.2.1. R_0 (Reference Resistance)

The parameter R_0 is the resistance given by the sensor before exposure to any vapor. This parameter is an important characteristic of the sensitivity. When several consecutive measurements were done for each sensor, the results are shown in Fig. 6. We concluded that all sensors showed good repetition in their work. We can observe that the difference in the resistor values for each sensor separately is somewhat small and this indicates the quality of these sensors (Endres *et al.*, 1995).

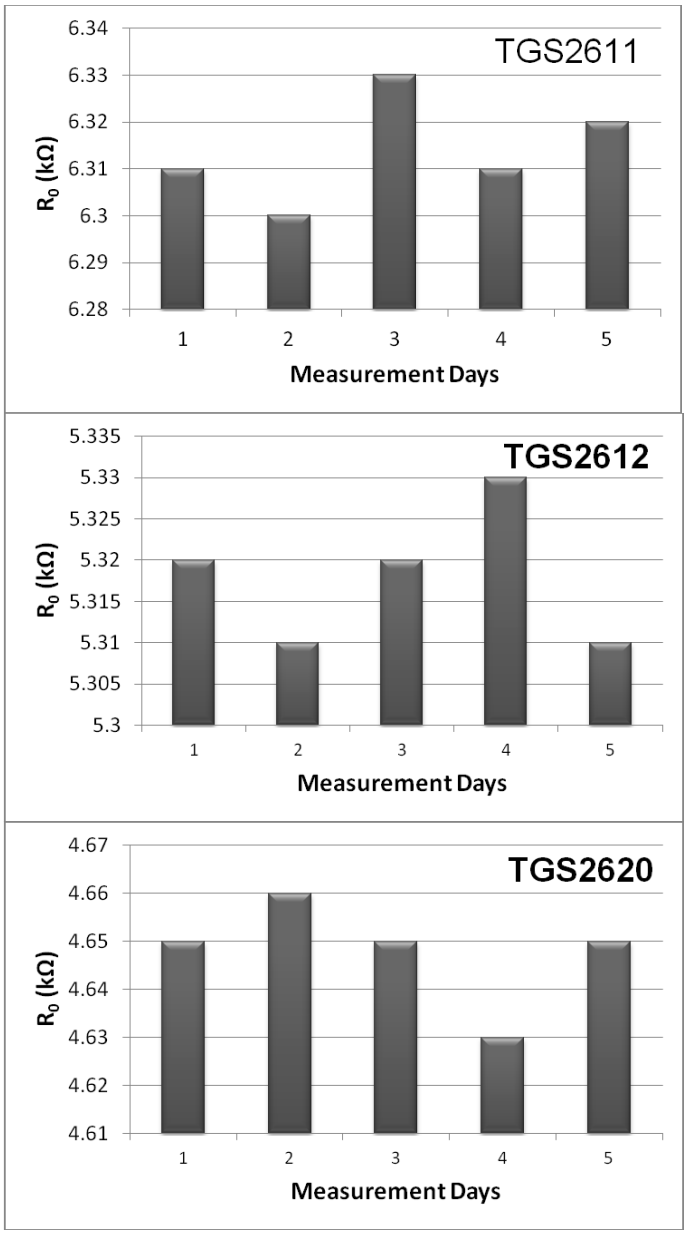

Fig. 6. Repetitive of the sensors represented by the physical parameter R_0

3.2.2. Sensitivity (S)

Sensitivity (S) is an important physical parameter (Khadayate *et al.*, 2007) which can be calculated from the following equation:

$$S = \frac{R_0 - R_s}{R_0} \quad (2)$$

This parameter distinguishes each sensor as well as vapors from each one.

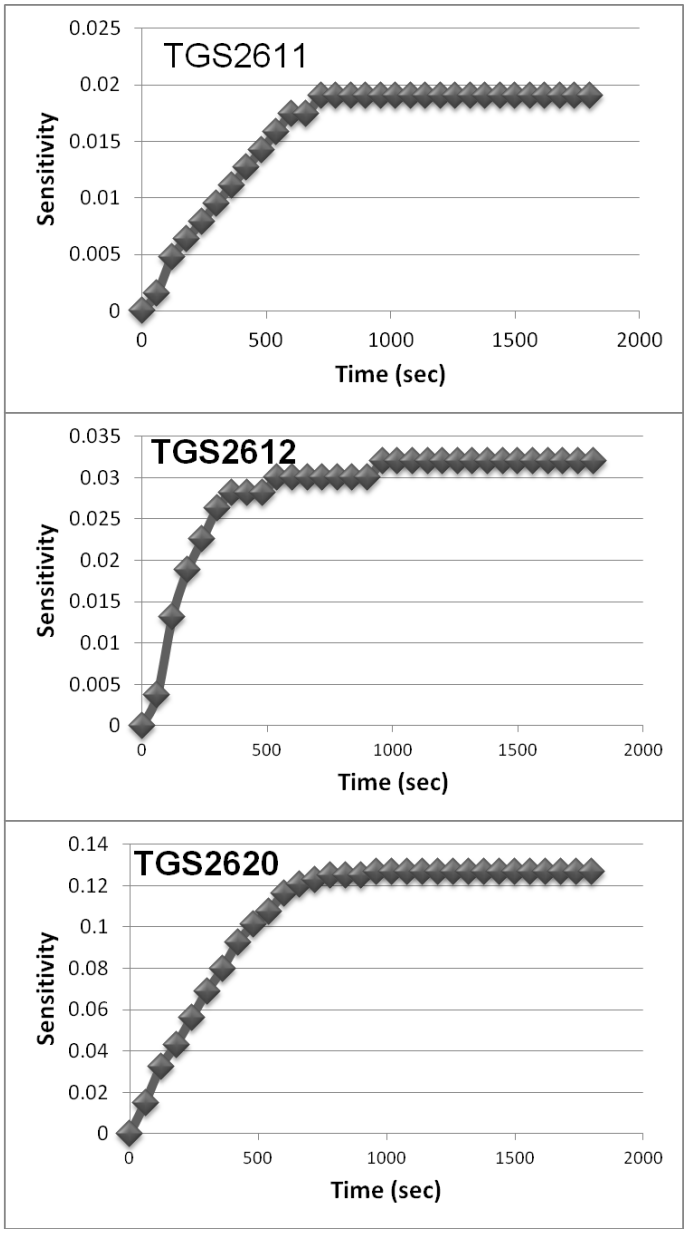

Fig. 7. Sensitivity response changes of the sensors set by time

As shown in Fig. 7, initially the sensitivity increase with time, then as the time increase the sensitivity response reaches stability at one value. This indicate that, the three sensors were able to identify the oil vapor.

3.2.3. Sensitivity Response Velocity (SRV)

Sensitivity Response Velocity (SRV) is defined as the rate of change in resistance with time when the sensors set is exposed to vapor. Fig. 8 shows that, the parameter (change of resistance by time) decreased exponentially with increasing number of reading and then stability at one value. This is normal because the sensors after a certain number of reading have been identified the vapor under studied. This explain why the sensitivity response velocity has been established.

3.2.4. Sensitivity Response Time (t_r)

This parameter expresses the time taken by the sensor to identify the studied vapor or can be expressed as the time when the sensor has stabilized at a constant value either for resistance R or for sensitivity response S. Table 2 shows the sensitivity re-

sponse time for each sensor after exposure to the vapor of Libyan olive oil.

Table 2

The sensitivity response time for each sensor for Libyan olive oil

Sensor	2611	2612	2620
t_r (sec)	720	960	960

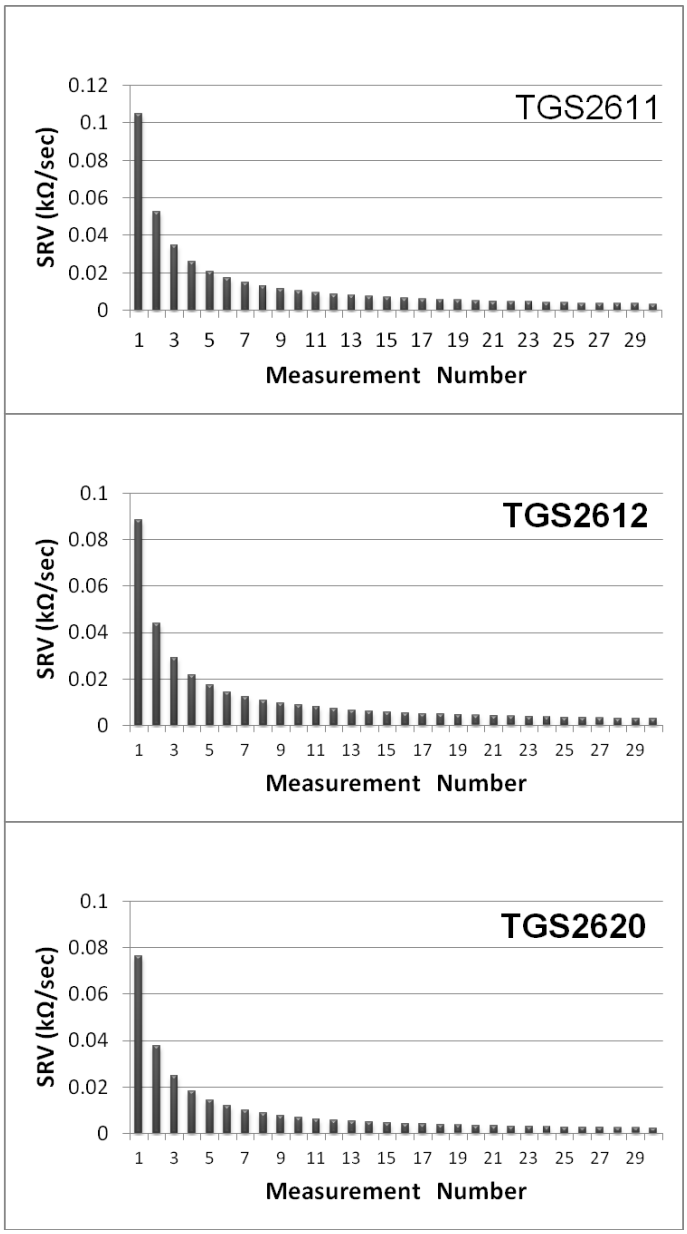

Fig. 8. Changes in the response velocity of the sensors set for the number of readings

It is clear from Table 2 that all sensors reacted to vapor of Libyan olive oil. The two sensors (TGS2612-TGS2620) have same sensitivity response time while the sensor (TGS 2611) has lower sensitivity response time.

3.2.5. Fingerprint Sensors (FPS)

All the vapors or gases can be distinguished from each other by having their own fingerprint for a particular set of sensors (Alhamed *et al*., 2012**)**. In this research, we were able to find a special fingerprint for olive oil vapor for a set of three gas sensors. Fig. 9 shows the fingerprint of the sensitivity response parameter S.

In this study, we determined that the three axes (1-2-3) shown in Fig. 9 which represent the three sensors (2611-2612-2620) respectively. All axes have the same gradients, so when drawing any parameter, it will show us that this parameter is placed on the three axes (which will display the values of this parameter for each sensor) and thus we will get a special form that distinguishes vapor or gas. This is a fingerprint for the parameter S.

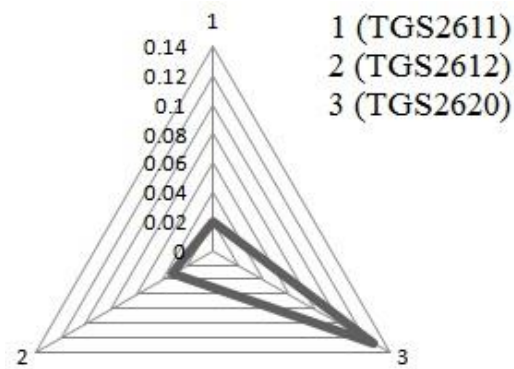

Fig. 9. A fingerprint for the sensitivity response parameter of Libyan olive oil vapor

A fingerprint for olive oil vapor can also be found for all previous parameters [R_0- SRV- t_r]. Note from Fig. 9 the best direction was toward axis (3) which is towards sensor 2620.

4. Conclusion

The sensors set, which consist of three gas sensors that were formed to identify the Libyan olive oil vapor, showed a clear response to this vapor. The physical parameters that we analyzed indicated that this sensor set gave a clear stability to the sensitivity response. This set was indented to this vapor in a short time, not more than 16 minutes. We also created the fingerprint of this oil for the physical parameter S, which will be used as a distinguishable parameter to other olive oil vapor from several countries.

Reference

Alhamed, M., Hille, O., Maznouk, N. (2012) 'The selectivity and sensitivity improvement of TGS gas sensors set for some gases and Vapor', University of Aleppo, Syria.

Corcoran, P., Shurmer, V. H. (1994) "An intelligent gas sensor", *Sensors and Actuators*, *A*, 41, 42, pp. 192-197.

Dakkak, R., Alhamed, M., Hille, O. (2009) 'Participation to forming an experimental apparatus according to the electronic nose technique to recognize the olive oil', *University of Aleppo*, Syria.

Endres, H., Göttler, W., Jander, H., Drost, S., Sberveglieri, G., Faglia, G., Perego, C. (1995) 'A systematic investigation on the use of time-dependent sensor signals in signal-processing techniques', *Sensors and Actuators B-chemical*, 24, 25, pp. 785-789.

Helli, O. (2003) "Conception d'un nez électronique pour la surveillance de l'environnement", Université de Metz – France.

Khadayate, .R. S., Sali, V. J., Patil, P.P. (2007) 'Acetone vapor sensing properties of screen-printed WO3 thick films', 72, pp. 1077-1081.

Maznouk, N., Alhamed, M., Hille, O. (2009) 'Studying of structural and electrical characteristics of thin films prepared by the technology of Sol-Gel For SnO_2 tine oxide and WO_3 tungsten oxide mixture to use it as gas detectors', University of Aleppo, Syria.

Penza, M., Cassano, G., Tortorella, F., Zaccaria, G. (2000) 'Classification of food, beverages and perfumes by WO_3 thin-film Sensors array and pattern recognition techniques', *Sensors and Actuators B 73*(2001), pp. 76-87.