Libyan Journal of Science & Technology 14:1 (2022) 47-53

Faculty of Science - University of Benghazi

Libyan Journal of Science & Technology

journal home page: www.sc.uob.edu.ly/pages/page/77

Wien Bridge oscillator as a suitable power source for the wireless charge of biomedical devices under an inductive power transfer system.

Abdul-Wahab A. Adam*, **Khalil I. Hashim**, **Yousef O. khazmi**

Department of Physics, Faculty of Science, University of Benghazi

Highlights

- **Wireless power transfer (WPT) is transferring the electric energy wirelessly across the air gap.**
- **Inductive power transfer (IPT) is one of the methods of the WPT that depends on magnetic inductance.**
- **Oscillators are devices, which convert DC to AC at the required frequency.**

ARTICLE INFO

Article history:

Received 28 March 2021
Revised 24 March 2022
Accepted 28 March 2022

Keywords:

Wireless power transfer, inductive power transfer, Wien bridge, coupling, an oscillator circuit, sinusoidal waveform.

**Address of correspondence:*

E-mail address: wahabalorfi@gmail.com

ABSTRACT

An inductive power transfer (IPT) system is a mechanism used to solve charging problems to connect with wires for devices that are difficult, such as stimulation devices implanted inside the human body for the heart and nervous system, also for commercial devices such as charging mobile phones. In this paper, we studied the oscillator of the Wien bridge and how to set it in practice as a source of power for the wireless IPT system, in terms of the output and the permissible frequency range, we also studied the oscillator theory and the effect of physical parameters such as the values of resistors and capacitors on the frequency, voltage, current, power, and the form of the resulting wave. By running a simulation via NI MULTISIM 14.2, a program specialized in electronic circuits, we found that the Wien bridge oscillator with LM7171AIM operational amplifier has a noise-free sine wave shape, with well frequency stability. In addition, it has a low power that can be controlled through the bridge as required by the target devices, and it has a low-frequency range that satisfies the safety standards. In principle, this makes it very convenient as a power source for biomedical devices implanted inside the human body.

1. Introduction

The inductive power transfer (IPT) is one of the methods of wireless power transfer (WPT) in a near magnetic field (NMF). The wireless power transfer system can be performed in two ways; the first one is the far-field under the microwave, radio frequency (RF), and optical radiation. The second way in the near field which is performed by the electric field is called capacitive power transfer (CPT) and magnetic field as Magnetic Resonant Coupling (MRC) and IPT system (Christopher *et al.*, 2014; Santi *et al.*, 2018; Kim *et al.*, 2010; Yi, 2015; Rozman *et al.*, 2017). The idea of transmitting wireless electric power is not new, Tesla invented it in 1893 (Valtchev *et al.*, 2012; Dipak *et al.*, 2003; Brecher and Arthur, 2014). However, with technological development as the need for wireless charging, WPT has gained attention. IPT system works high efficiently over a short distance in the range of several centimeters, which can be adopted in biomedical devices.

The WPT system with the IPT approach depends on the transfer of electrical power by a transformer and converted to magnetic energy, then converted into electrical power again with different voltage and power, under NMF (Schormans *et al.*, 2018; Bosshard *et al.*, 2012; Gong *et al.*, 2017). IPT system relies on electromagnetic inductance that produces a magnetic field connecting two separated coils, with low frequency. The idea of IPT came to solve many industrial and medical problems which are difficult to access by wire (Bocan and Sejdi'c, 2016; Ho *et al.*, 2014; Qiu *et al.*, 2013). The IPT system is the most effective and used in devices based on the operating system WPT in the near field, one of the important areas of this approach in the medical field, it is considered safe to apply in the implanted biomedical devices inside the human body, such as Neuro stimulator, which are spinal-cord stimulators have been used in the treatment and relieve symptoms of neurological disorders, including pain, epilepsy, as Deep-Brain stimulators for Parkinson's disease (Schormans *et. al.*, 2018; Celik and Aydin, 2017), Pacemaker to treat irregularity in the heartbeat arrhythmia (Schormans *et al.*, 2018; Celik and Aydin, 2017; Sritha and Maheswari, 2017; Boveda *et al.*, 2013).

The intraocular biomedical sensor device was implanted in the patient's eyeball to monitor and regulate the intraocular pressure for glaucoma treatment (Gong *et al.*, 2017; Marnat *et al.*, 2012). Cochlear Implants for individuals with severe hearing impairment were the implantable device was first that operated under the wireless system (Schormans *et al.*, 2018; Bocan and Sejdi'c, 2016). Implanted biomedical devices contain a battery that supplies power to the device. The battery, as it is known, has a limited life, and needs to be changed or recharged to keep on operating. The pacemaker has an average life of seven years, because it is implanted under the skin, its change requires surgery. These devices were developed so that the battery life would be extended; it works only when the heart needs stimulation.

However, with WPT technology there is no longer a need to change the device or extend the life of the battery. Where IPT system can be used either to recharge the battery or to operate the device directly without a battery. This is done by implanting the receiver with/without the battery under the skin, and it is connected

© 2022 University of Benghazi. All rights reserved. ISSN: Online 2663-1407, Print 2663-1393; National Library of Libya, Legal number: 390/2018

to the transmitter through the wireless inductive link from outside the body to transmit wirelessly electrical energy (Gong *et al*., 2017; Ho *et al*., 2014; Celik and Aydin, 2017; Sritha and Maheswari, 2017; Untereker *et al*., 2017; Zhou *et al*., 2020). In general, the IPT system consists of two circuits named a transmitter and a receiver, where the transmitter consists of an inverter or oscillator circuit to convert the direct current (DC) current supplied from the source into alternating current (AC) to produce electromagnetic inductance and thus generate a magnetic field through the transmitter coil. The oscillator is connected to a resonant circuit (LC) to set the desired frequency for operation. The capacitor with a coil (inductor) acts as an antenna LC (tank) circuit of the transmitter (Tx) to produce the magnetic flux which is received by the receiver coil (Rx) and transformed into an output voltage. The capacitor with an inductor in the LC circuit receiver (Rx) is connected to AC/DC converter and load resistance is shown in Fig. 1.

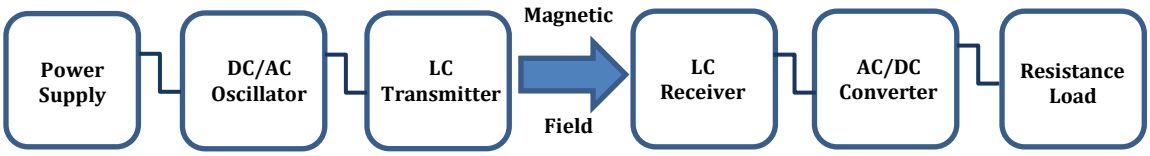

Fig. 1. Diagram of IPT system

Proceeding from Faraday's law, the magnetic field is generated in the coil when alternating current passes through it. The IPT system depends mainly on the magnetic field produced between the two coils due to time-varying current, which means that the need to AC source is necessary. Therefore, in this paper we present a study of the oscillator output in terms of frequency, current, voltages, power, waveform, and the parameters affecting them.

2. The Oscillator.

In electronic and electricity, an oscillator circuit is defined as a DC to AC converter, its output is in the form of a wave such as sine, square, etc. with a frequency that can be controlled and tuned as shown in Fig. 2. (Theraja and Theraja, 2005).

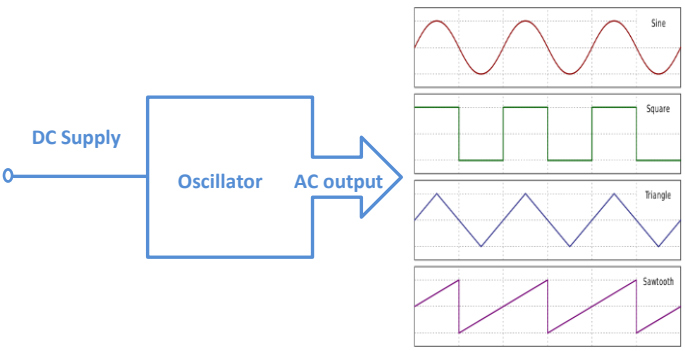

Fig. 2. Waveform of oscillator output

The oscillators are divided into two groups according to the type of signal. Oscillators generating sinusoidal signals are termed harmonic or linear oscillators. Examples of these types of circuits are the Hartley, Colpitts, Wien-bridge, and twin-T oscillators. All other oscillators are termed relaxation or non-sinusoidal oscillators, they are built using different types of ICs and different transistors (Gonzalez, 2007; Can and Salama, 1978).

To choose the most suitable oscillator power source that enhances the efficiency of the biomedical devices battery, will be studied the oscillator in terms of its ability to maintain a constant frequency (Frequency Stability), voltage and current output, power, frequency, and waveform of the oscillator. We started searching for a low-frequency oscillator to be suitable for the safety standards of biomedical devices that need wireless charging and also low power to meet the device's power requirements without using batteries as a power source. When connecting them together we obtain a device that has characteristics of low power and frequency and good voltage output, from here we started our work. We chose the Wien Bridge because of its low-frequency range and the Op. Amp. LM7171AIM for its low power requirements.

3. Wien Bridge Oscillator (WBO).

The WBO is used to convert DC to AC. This oscillator is characterized by highly stabilized amplitude and voltage amplification, exceedingly good sine wave output, and good frequency stability (Theraja and Theraja, 2005), balanced bridge as its reactive feedback network (Gonzalez, 2007; Senani *et al*., 2016; Schubert and Kim, 2016). It is a low-frequency (5 Hz — 500 kHz)(Theraja and Theraja, 2005) but with the op. amp. of type (LM7171AIM), the generated frequency can be extended to MHz range which is required in IPT system for good transmission efficiency. The op. amp. (LM7171AIM) is a high-speed voltage feedback amplifier that has the slewing characteristic of a current feedback amplifier and low power, yet it can be used in all traditional voltage feedback. Specified for ±15V and ±5V Operation. It is small (4.99 mm×3.91 mm) and cheap. A block diagram for op. amp. (LM7171AIM) is shown in Fig. 3. Which we have connected using NI MULTISIM simulation program with Wien Bridge to obtain the sinusoidal WBO as shown in Fig. 4.

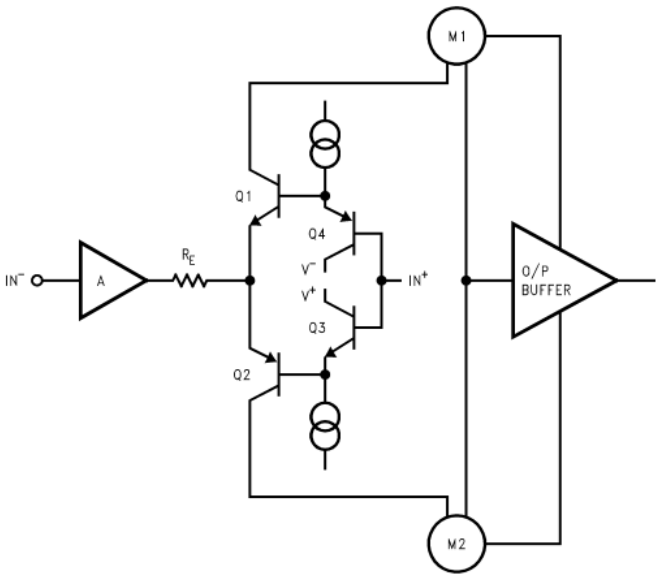

Fig. 3. LM7171AIM block diagram,

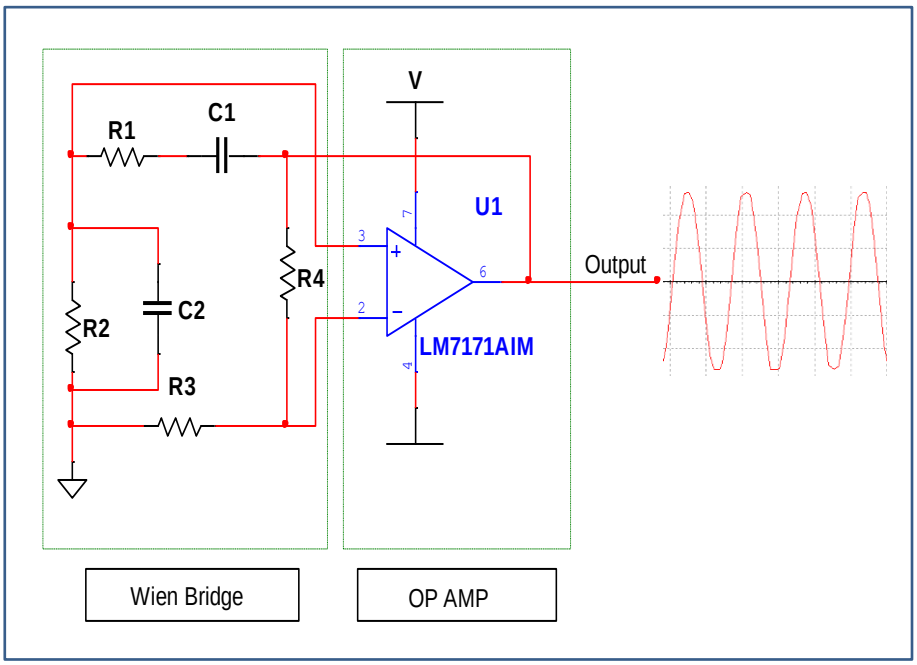

Fig. 4. Wien Bridge Oscillator Circuit.

4. Theory of the WBO.

To analyze the Wien Bridge mathematically consider the circuit shown in Fig. 5.

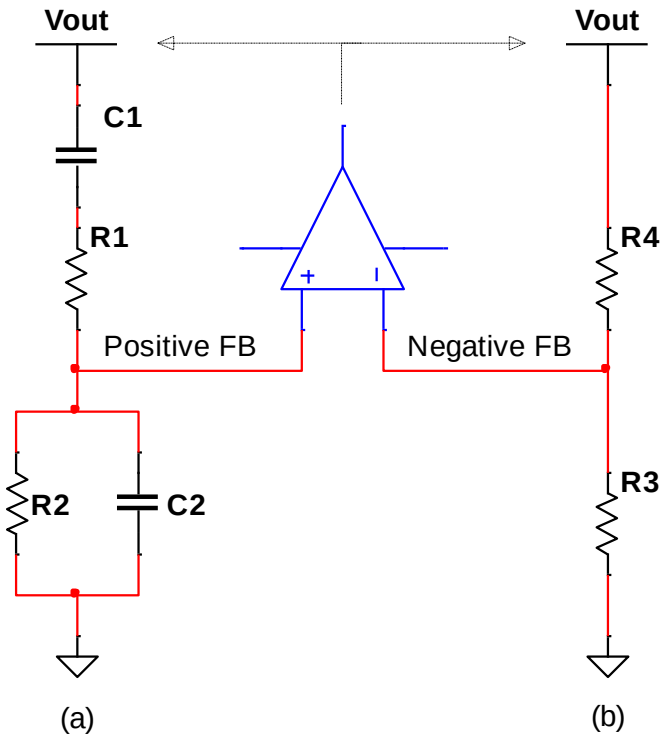

Fig. 5. Analyzing Wien bridge circuit.

The impedances in positive part shown in Fig. 5a is given by:

$$Z_1 = R_1 + \frac{1}{j\omega C_1} \quad \rightarrow (1)$$

$$Z_2 = \frac{1}{\frac{1}{R_2} + j\omega C_2} \quad \rightarrow (2)$$

the input voltage in this part:

$$V_{in} = \frac{V_{out} Z_2}{Z_1 + Z_2} \quad \rightarrow (3)$$

then, the attenuation of this part is equal:

$$\beta(j\omega) = \frac{V_{in}}{V_{out}} = \frac{1}{3 + j(\omega RC - \frac{1}{\omega RC})} \quad \rightarrow (4)$$

With condition $C_1 = C_2$, $R_1 = R_2$, the input voltage at negative feedback at part (b) in Fig. (5) is:

$$V_{in} = \frac{V_{out} R_3}{R_3 + R_4} \quad \rightarrow (5)$$

the gain of this part is:

$$A = \frac{V_{out}}{V_{in}} = 1 + \frac{R_4}{R_3} \quad \rightarrow (6)$$

by applying Barkhausen criteria, the first condition to sustain the oscillations ($A\beta(j\omega) = 1$) to get a sine wave form without decay or noise:

$$\frac{1}{3 + j\left(\omega RC - \frac{1}{\omega RC}\right)}\left(1 + \frac{R_4}{R_3}\right) = 1 \quad \rightarrow (7)$$

Second, the condition of the oscillation frequency (Gonzalez, 2007):

$$\omega RC - \frac{1}{\omega RC} = 0 \quad \rightarrow (8)$$

which leads to:

$$f = \frac{1}{2\pi RC} \quad \rightarrow (9)$$

Moreover, by applying this condition in Eq. (7) we will get the ratio (Theraja and Theraja, 2005; Gonzalez, 2007)

$$\frac{R_4}{R_3} = 2 \quad \rightarrow (10)$$

which refer to by the Latin symbol zeta (ζ).

If $C_1 \neq C_2$, $R_1 \neq R_2$, (Westra *et al.*, 1999).

$$f = \frac{1}{2\pi\sqrt{R_1 C_1 R_2 C_2}} \rightarrow \quad (11)$$

5. Experimental Simulation.

By using NI MULTSIM simulation program, the Wien bridge connected to the LM7171AIM op amp at the highest possible voltage of the integrated circuit (IC) as shown in Fig. 4., and studied the parts effect on the oscillator output, frequency, power, current and voltages. Conditions of the WBO to work at its best performance with op amp. First, to study the effect of the negative feedback part (NFP) (from Eq. (6) ζ) on the oscillator output and because R_4 must be greater than R_3, R_3 consider fixed at 10 Ω and changed R_4 and at the same time, the positive feedback parameters were fixed. Then the ζ ratio was fixed and changed the values of R_3 and R_4. Second, the effect of the positive feedback part (PFP) was studied on the frequency tuning according to Eq. (8). When applying the theoretical conditions, the frequency values are independent of the NFP, and it is determined by the values of the capacitor and the resistor of the PFP, when ζ= 2. The oscillator can be operated at different values for this ratio, and each ratio has a frequency range in which the frequencies read by the oscilloscope deviate from the bridge frequency calculated by Eq. 9, to find a method to simplify the process of tuning the required operational frequency. When connecting the Wien bridge to the indicated op amp and operating at ζ=10, a frequency of 105 kHz is obtained and the waveform is shown in Fig. 6.

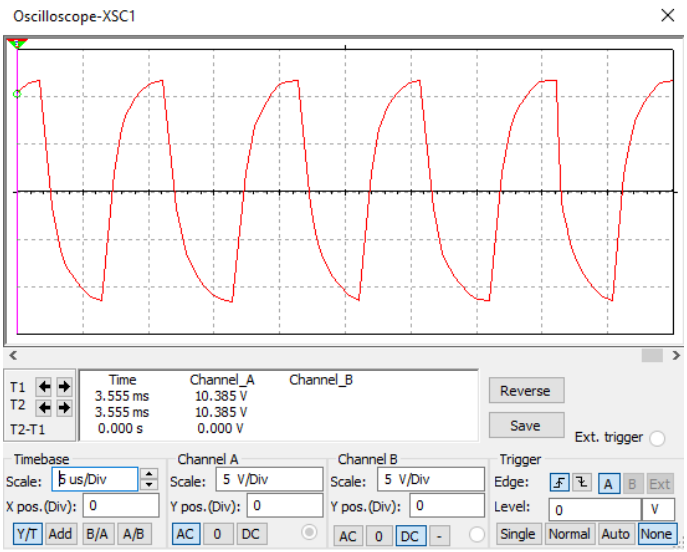

Fig. 6. The oscillator's wave form oscilloscope screen at ζ=10, f_{os} = 105 kHz.

Through experimentation we noticed that when the ζ ratio deviates from the value of 2, the frequency of the parts of the bridge is not equal to the frequency read by the oscilloscope, so we referred to the frequency of the oscillator with the symbol f_{os} that obtained from simulation oscilloscope, and the frequency of the parts of the Wien bridge with the symbol f_{wb} that given by Eq. (9). We found that the highest frequency value of WBO is f_{os} = 3 MHz at R_3 = 10 Ω and R_4 = 10 kΩ. The lowest value of the capacitor is C =14 pF and R = 185 Ω, f_{wb} = 61.48 MHz at ratio ζ= 1000 with square waveform and $f_{wb} > f_{os}$. When $f_{wb} = f_{os}$, then Eq. 10 is fulfilled and can be occurred at ζ= 2.1 when the values of are R_3 = 1 kΩ, R_4 = 2.1 kΩ, R = 840 Ω, C = 3 nF with maximum frequency range f_{os} = 61.5kHz and sine waveform as shown in Fig. 7. Then the frequency can be calculated from Equation 9 and the negative feedback resistances (R_3 and R_4) have no effect on the frequency calculations. In the IPT system, we are concerned with lower frequencies, which will be satisfied with the hundreds of kilohertz limits. The result in Fig. 7 and the frequency matching of the oscilloscope to the Wien bridge frequency at ζ= 2.1 confirms the quality of the simulation program and the matching of its results with the theoretical and practical results.

What we are interested in is setting the oscillator at a value at which the current is the largest possible, because IPT depends on the magnetic field that is directly proportional to the electric current (Modified Ampere's Circuital Law (MACL)), and the greater the magnetic flux, the better the wireless power transmission efficiency. From the datasheet, the highest output current of the IC is 100 mA. The oscillator should work at a frequency not less than 100 kHz and at the highest possible current.

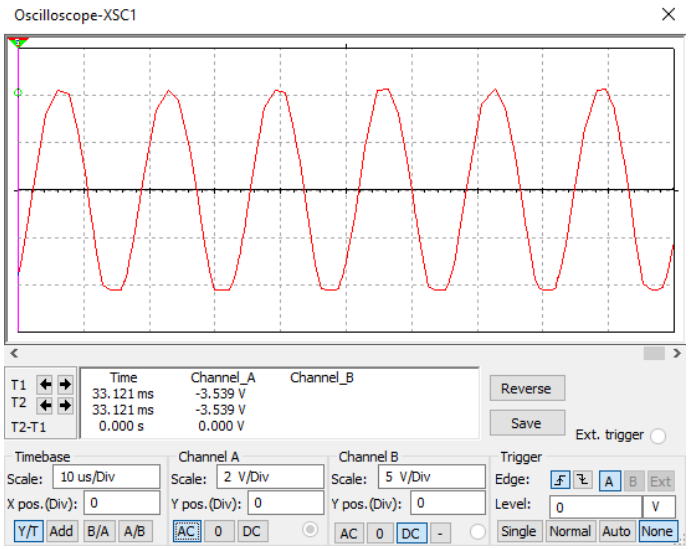

Fig. 7. The oscillator'swaveform oscilloscope screen at ζ= 2.1, f_{os} = 61.5 kHz

6. Results and discussion.

6.1 Negative Feedback Part (NFP).

The important parameter in this part is the ζ ratio, which we found by the simulation to have a value of 2.1, at which the theory is realized in Eqs. (9) and (10), and the maximum value of this ratio 1000, any ratio greater than this value will not change output i.e. a ratio of 1000 and more we get the stability of the output. Each ratio in the range of 2-1000 separately has frequencies bandwidth, which expands as the ratio ζ is increased, the range of frequencies is controlled by changing the values of the PFP. Table 1 presents the results of the NFP and the effect of its parametersR_3, R_4 and ζ on the output of the oscillator current, voltage, power and frequency. With fixed R, C and R_3 at any values, we fixed them at R_3 = 10 Ω, R = 47 and C = 13.6 n, with f_{wb} = 249 kHz.

Table 1

Results of effective negative feedback ratio ζ on WBO outputs.

R_4Ω	ζ	I_{rms} (mA)	V_{rms} (volt)	P (W)	f_{os} (kHz)	Output waveform
10	1	-	-	-	-	No wave
50	5	133	5.74	0.76	149	In wave form
100	10	135	9.19	1.24	105	In wave form
150	15	118	10.3	1.22	94.5	In wave form
200	20	106	10.7	1.13	87.4	In wave form
250	25	98	11	1.08	81.3	In wave form
300	30	92.2	11.2	1.03	77.2	In wave form
350	35	87.9	11.4	1.00	74.5	In wave form
400	40	84.7	11.5	0.97	72.2	In wave form
450	45	82.9	11.6	0.96	72	In wave form
500	50	79.9	11.6	0.93	68.5	In wave form

From the results, it can be seen that the maximum power at the ratio of 10 and frequency of 105 kHz is 1.24 watts with the output voltage of 9.19 volt. These values are suitable for the operation of the IPT system at low power and frequency for biomedical devices that are required for safety standards. Also note that as the values

of the resistor and the ratio of increase, the power decreases relatively (little), the voltage has stabilized, and there is no significant variation in its values. By using PYTHON program, the obtained results are plotted:

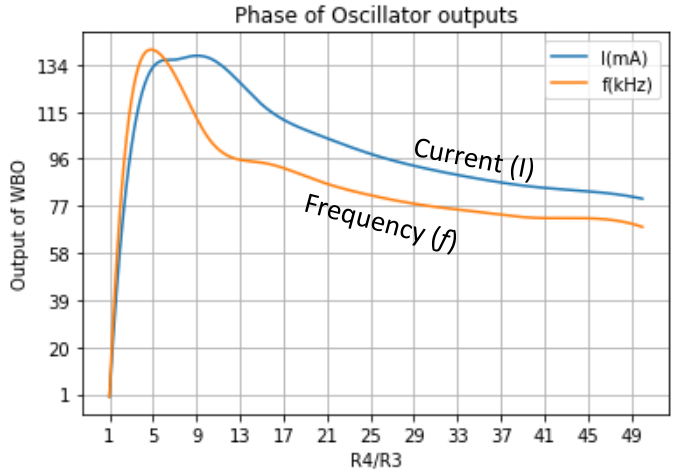

Fig. 8. Effect of negative feedback parameter on frequency and current output.

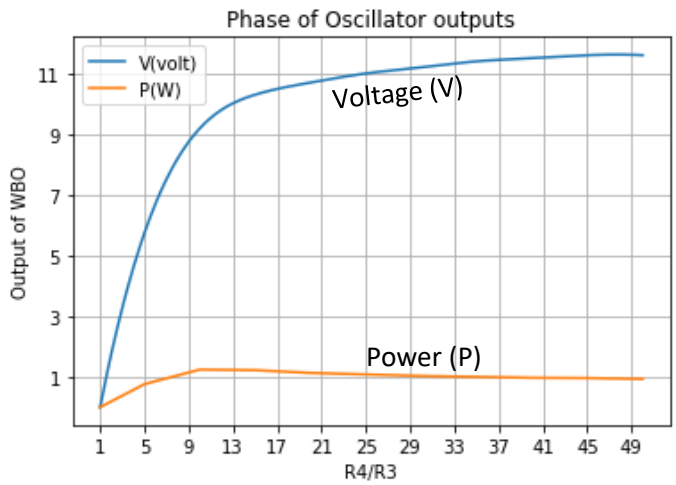

Fig. 9. Effect of negative feedback parameter on power and voltage output.

From Fig. 8, Fig. 9 and Table 1 it can be seen that the ζ ratio has more effect on the current and frequency than the voltage and power which are relativity more stable. The frequency decreases, but its range expands, i.e. by changing the capacitor value and the positive feedback resistor, larger values of the frequency can be obtained. The oscillator has a good performance at ζ= 10 for each value of R_3 and R_4. Fixing the ratio at 10 by changing the values of R_3 and R_4 as shown in Table 2.

Table 2.

Output of oscillator at ζ=10

$R_3\Omega$	$R_4\Omega$	I_{rms}(mA)	V_{rms}(volt)	P(W)	f_{os} (kHz)
10	100	135	9.19	1.24	105
20	200	112	10.4	1.17	113
30	300	102	10.7	1.09	114
40	400	97.5	10.9	1.06	114
50	500	94.5	11	1.04	114
60	600	92.9	11.1	1.03	115
70	700	91.4	11.1	1.02	115
80	800	90.6	11.1	1.01	115
90	900	89.9	11.2	1.00	115
100	1000	89.2	11.2	1.00	115
1k	10k	84.7	11.7	0.99	115

Table 2 shows that the values are close to each other and stable, excluding the first value from the table. Consider the best of them at $R_3 = 10\ \Omega$, $R_4 = 100\ \Omega$ and $\zeta = 10$ our oscillator was doing well. The current is most affected in this case, which is what can be noticed when drawing the relationship between it and R_3, as shown in Fig. 10. It is noticed from Tables 1 and 2 that the current value is affected as the value of the resistors ratio increases, and also as R_3 and R_4 values are increased, the current decreases. Because the wireless inductive power transmission system depends on the magnetic field that is proportional to the changing of the electric current with respect to time, what matters to us is the value of the current and the best value is at the ratio of 10.

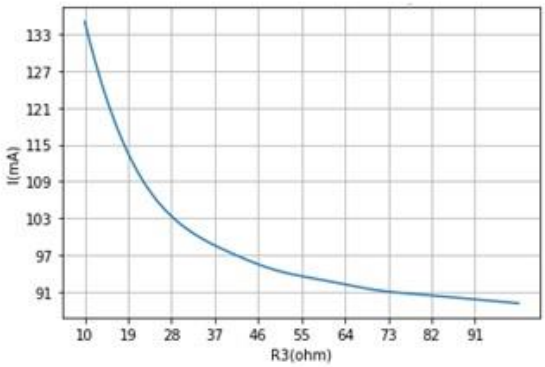

Fig. 10. The current output with changingR_3.

6.2 Positive Feedback Part (PFP).

Here, the value of the capacitor Conly affects the frequency, while it has no significant effect on other outputs. The resistor R affects the output of the oscillator, so the frequency increases when R decreases, and the electric current, and the voltage difference are relatively increased as the resistor R increases. When the ratio ζ= 2, the frequencies are equal $f_{wb} = f_{os}$, then the values of the oscillator frequency can be guessed and determined by the values of the resistor and the capacitor of the PFP only. But this value of the ζ ratio does not reach the frequency range of the bridge to 100 kHz which we need in the IPT system to work well. The difference in the ζ ratio from the value 2 makes it somewhat difficult to estimate the frequency of the oscillator and the values of the resistors and the capacitor, which distributes between the parts of the bridge positive and negative. So what makes us think about another path, which is to calculate the bridge frequency and the read frequency of the entire circuit and compare it at each ratio obtained to approximate and predict the frequency by choosing the values ?? of the resistors and the capacitor. Based on the results we got in the first part, which are the values of the bridge resistors, in which we obtained a wide range to choose the appropriate frequency with ζ= 10, with changing the values of PFP, what we are interested in is the frequency greater than 100 kHz and the highest current at $R_3 = 10\ \Omega$, $R_4 = 100\ \Omega$, where $R = 195\ \Omega$ creating the Table 3.

Table 3

The frequencies with changing the value of PFP with fixed resistor R.

C nF	$f_{wb}kHz$	$f_{os}kHz$	f_{wb}/f_{os}	Average of f_{wb}/f_{os}
0.8	1020	506	2	
0.995	821	430	2	
1.5	544	274	2	
2	408	208	2	
2.5	327	168	1.94	
3	272	140	1.94	1.96
3.5	233	120	1.94	
4	204	106	1.94	
4.5	181	94	1.93	
5	163	85	1.92	

Table 3 shows the stability of the ratio f_{wb}/f_{os} and through Fig. 11. also the decrease in frequency as the capacitor value increases. Thus, can be determined the frequency in an approximate way. The required frequency for the circuit and multiply it by the average of f_{wb}/f_{os} to get the frequency of the Wien bridge, from which the values of the capacitor and resistor of the bridge can be determined. This way is available for any resistor's value just when the oscillator is performing as intended.

For example, if the required frequency is 100 kHz at $R_3 = 10\ \Omega$, $R_4 = 100\ \Omega$ and (or at any values of ζ= 10) $R = 195\ \Omega$, $\frac{f_{wb}}{f_{os}} = 1.96$, we can find the capacitor value to get this frequency.

$$f_{wb} = 1.96 f_{os} = \frac{1}{2\pi RC}$$

$$C = \frac{1}{3.92\pi R f_{os}} \qquad \rightarrow (12)$$

$$= \frac{1}{3.92 \times 3.14 \times 195 \times 100 \times 10^3} = 4.166nF$$

Notice: The average value of 1.96 which is shown in Table 3 is valid only for the values of ζ= 10, and it gives a well approximate result. This method can be repeated for all ζ values and find $\frac{f_{wb}}{f_{os}}$ for each ζ separately.

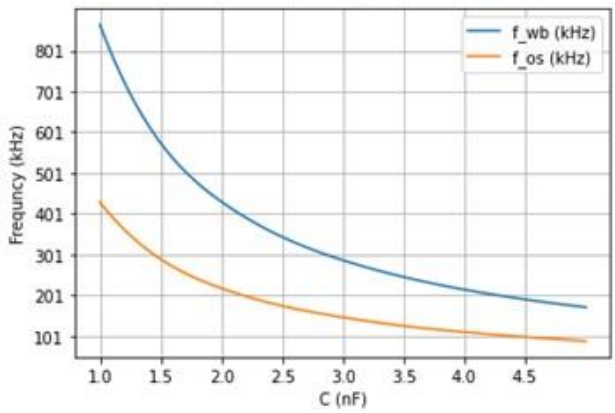

Fig. 11. Effect of positive feedback capacitor on oscillator frequencies.

Now we fix the value of the capacitor at any value for example let be $C = 17nF$ and change the value of the resistor$R$, and write the results in Table(4). From Table 4 the average f_{wb}/f_{os}notice that ratio obtained in Table 3 1.96 is valid for resistors greater than 60 Ω.

Table 4

The change of the frequencies with changing the value of positive feedback resistor at fixed value of the capacitor C.

Ω	$f_{wb}kHz$	$f_{os}kHz$	f_{wb}/f_{os}
10	937	228	4.11
20	468	140	3.35
30	312	108	2.89
40	234	91	2.56
50	187	80	2.35
60	156	71	2.20
70	134	63	2.12
80	117	57	2.10
90	104	53	2
100	94	46	2

Through this study, the appropriate values of the resistors are in the range of the ratio ζ= 10, where $R_3 = 10\Omega$ and $R_4 = 100\Omega$, and R is greater than 60Ω, and then the frequency is determined by choosing the capacitor value through the average value obtained from Table 3 and using the Eq. (12). Where the maximum frequency value is 1.16 MHz and $R = 4.7$ kΩ and $C = 14\ pF$.

7. Conclusion.

An approximate method was found to set the values of the parts of the WBO at the required frequency. Also, found that the LM7171AIM op amp enhances the performance of the Wien Bridge until its frequency range reaches 3 MHz and that it has a low power that suits what the implanted biomedical devices need wireless charging and forms with the bridge a strong oscillator for adoption in the IPT system.

References

Bocan, K. N., & Sejdić, E. (2016) 'Adaptive transcutaneous power transfer to implantable devices: A state of the art review', *Sensors*, 16(3), pp. 393. doi: 10.3390/s16030393

Bosshard, R., Mühlethaler, J., Kolar, J. W., & Stevanović, I. (2012) 'The η-α-Pareto front of inductive power transfer coils. IECON 2012-38th Annual Conference on IEEE Industrial Electronics Society.

Boveda Serge, Garrigue Stephane and Ritter Philippe (2013) 'The History of Cardiac Pacemakers and Defibrillators', *Dawn and Evolution of Cardiac Procedures,* pp. 253-264 Springer-Verlag Italia 2013.

Brecher Aviva and Arthur David, "Review and Evaluation of Wireless Power Transfer (WPT) for Electric Transit Applications". FTA Report No. 0060, Federal Transit Administration. PP1-52. August 2014.

Can S. and Salama C.A.T. (1978) 'Integrated voltage-controlled oscillator circuit using single-channel m.o.s. technology', *Electronic Circuit and System*, 2, 4, pp. 109-114.

Carlo De Santi, Matteo Meneghini, Alessandro Caria, Ezgi Dogmus, Malek Zegaoui, Farid Medjdoub, Boris Kalinic, Tiziana Cesca, Gaudenzio Meneghesso and Enrico Zanoni (2018) 'GaN-Based Laser Wireless Power Transfer System', Materials, 11(1), 153, pp. 1-13.

Celik M.E. and Aydin E. (2017) 'An Efficient Inductive Coil Link Design for Wireless Power Transfer to Visual Prostheses', *ACTA Physica Polonica*, 132, 3, pp. 535-537.

Christopher M R. Valenta and . Durgin Gregory D. (2014) 'Harvesting Wireless Power: Survey of Energy-Harvester Conversion Efficiency in Far-Field, Wireless Power Transfer Systems', *IEEE Microwave Magazine*, pp. 108-120.

Dipak L. Sengupta, and Tapan K. Sarkar (2003) 'Maxwell Hertz, the Maxwellian, and the Early History of Electromagnetic Waves', *Antennas and Propagation Magazine*, 45, 2, pp. 13-19,

Gong Chen , Liu Dake , Zhidong Miao, and Min Li. (2017) 'A Magnetic-Balanced Inductive Link for the Simultaneous Uplink Data and Power Telemetry', *Sensors*, 17,1768, pp. 1-22.

Gonzalez Guillermo (2007) "Foundations of Oscillator Circuit Design". Artech House Inc.

Ho John S., Yeh Alexander J., Neofytou Evgenios, Kim Sanghoek, Tanabe Yuji, Patlolla Bhagat, Beygui Ramin E., Poon Ada S. Y. (2014) 'Wireless Power Transfer to Deep-Tissue Microimplants', PNAS, 111, 22, pp. 7974–7979.

Kim Hee-Seung, Won Do-Hyun, Jang Byung-Jun (2010) "Simple Design Method of Wireless Power Transfer System Using 13.56MHz Loop Antennas', IEEE, *Magazine*, pp. 1058-1063.

Marnat L., Ouda M. H., Arsalan M., K., and Shamim A. (2012) 'On-Chip Implantable Antennas for Wireless Power and Data Transfer in a Glaucoma-Monitoring SoC', *IEEE Antennas and Wireless Propagation Letters*, 11, pp. 1671-1674.

Qiu Chun, Chau K.T., Liu Chunhua, and Chan C.C. (2013) Overview of Wireless Power Transfer for Electric Vehicle Charging. World Electric Vehicle Symposium and Exhibition (EVS27). Barcelona, Spain, November 17-20, 2013. Pp. 1-9.

Rozman Matjaz, Fernando Michael, Adebisi Bamidele, Rabie Khaled M., Collins Tim, Kharel Rupak, Ikpehai Augustine (2017) 'A New Technique for Reducing Size of a WPT System Using Two-Loop Strongly-Resonant Inductors', Energies, 10, 1614. pp. 1-18.

Schormans Matthew, Valente Virgilio, Demosthenous Andreas (2018) 'Practical Inductive Link Design for Biomedical Wireless Power Transfer', *IEEE Transactions on Biomedical Circuits and Systems*, 12, 5, pp. 1112-1130.

Schubert Jr. Thomas F., Kim Ernest M. (2016) Oscillators and Advanced Electronics Topics. Morgan & Claypool publisher.

Senani Raj , Bhaskar D. R. , Singh V. K. , Sharma R. K. (2016) Sinusoidal Oscillators and Waveform Generators using Modern Electronic Circuit Building Blocks. Springer International Publishing Switzerland.

Sritha P., Maheswari K.T. (2017) 'An Improved Novel Wireless power transfer method for Pacemakers', *International Research Journal of Engineering and Technology (IRJET)*, 4(4), pp. 1343-1348.

Theraja B.L., Theraja A.K. (2005) A Textbook of Electrical Technology. S. Chand& Company LTD. Ram Nagar, New Delhi.

Untereker Darrel F., Schmidt Craig L., Jain Gaurav, Tamirisa Prabhakar A., Joachim Hossick-Schott, Viste Mark. (2017) 'Power Sources and Capacitors for Pacemakers and Implantable Cardioverter-Defibrillators', *Clinical Cardiac Pacing, Defibrillation and Resynchronization Therapy (Fifth Edition)*, pp. 251-269.

Valtchev Stanimir S., Baikova Elena N., Jorge Luis R. (2012) 'Electromagnetic Field as The Wireless Transporter of Energy', *Elec. Energ*, 25, 3, pp. 171–181.

Westra Jan R., Verhoeven Chris J.M., . van Roermund Arthur H.M. "Oscillators and Oscillator Systems Classification, Analysis and Synthesis". Springer Science+Business Media New York. Kluwer Academic Publishers in 1999.

Yi Kang Hyun. (2015) '6.78 MHz Capacitive Coupling Wireless Power Transfer System', *Journal of Power Electronics*, 15, 4, pp. 987-993.

Zhou Yujing, Liu Chunhua, Huang Yongcan (2020) 'Wireless Power Transfer for Implanted Medical Application', Energies, 13, pp. 1-30.