Libyan Journal of Science & Technology 15:1 (2024) 203-207

Faculty of Science - University of Benghazi

Libyan Journal of Science & Technology

journal home page: https://journals.uob.edu.ly/LJST

Invited review: A Review on Field Emission Microscopy, Principles, Theory, and Applications.

Khalil Ismaiel Hashim, Rasha A. Mansouri

Department of Physics, Faculty of Science, University of Benghazi, Benghazi, Libya.

Highlights

- **Field emission microscope is a powerful instrument for studying in atomic details the surface phenomenon.**
- **The device is used to measure the changes of the work function of the emitter when it is covered by adsorbed atoms.**
- **The device is also used to measure the work function of the individual hkl planes of the emitter.**
- **Adsorption and desorption of the adatoms on the emitter surface can be studied using this instrument.**

ARTICLE INFO

Article history:

Received 12 March 2024
Revised 20 August 2024
Accepted 21 August 2024

Keywords:

field emission microscope, electron emission, probe-hole field emission microscope, work function, Fowler- Nordheim equation and slopes, adsorption, desorption.

Address of correspondence:

Email address: khalilismaiel@gmail.com

K.I. Hashim

ABSTRACT

The purpose of this paper is to shed light on a very important field of electronic physics which should be known to those who are interested in physics and in electronic physics. The study describes a simple field emission microscope which was designed to permit measurement of electron emission from the whole area of the emitter's surface and a probe hole field emission microscope which was designed to permit measurement of electron emission from individual planes of the emitter's surface. Selection of the planes can be achieved by mechanical, magnetic, or electrostatic deflection of the image onto the probe-hole, which is located in the centre of the screen, and the transmitted current is collected by an electrode sited behind a hole in the centre of the screen. Changes in work function which result from the adsorption of metal atoms on the whole tip and individual planes of the emitter surfaces have been measured by many authors by noting the changes in the slope of Fowler-Nordheim plots. In addition, surface diffusion and desorption of metal atoms from the emitter surface have been investigated and the activation energies for these processes evaluated.

1. Introduction

1.1. History of Field Emission

Electron emission from a metal into a vacuum under the influence of a high electric field at the surface is called field emission and was first observed by Wood in 1897 (Wood, 1897). In contrast to other types of emission in which energy must be added to enable electrons to surmount the surface potential barrier, field-emitted electrons are transmitted through the potential barrier from energy states near the Fermi level (Cutler and Nagy, 1965).

Gossling (1926) showed that field emission is independent of temperature and suggested a description based on quantum mechanical tunneling through the potential barrier at the metal surface. A detailed description on this basis was given by Fowler and Nordheim (1928) (FN)) who successfully derived a relationship between current density (J), applied voltage (V), and the work function (φ) which is defined as the minimum energy needed to remove an electron from the bulk through the surface to a point outside the material. (Wang, j. & Wang, S. 2014)

$$J = 1.54x10^{-6}\frac{F^2}{\varphi t^2{}_{(y)}}\exp(-6.83x10^7\frac{\varphi^{\frac{3}{2}}}{F}f(y)) \qquad (1)$$

where J is in $Ampers/cm^2$, F in volts/cm, φ in electron volts (eV), and f(y) and t(y) are slowly varying functions their values lie close to unity and are tabulated by many authors (Nordheim, 1928; Gyftopoulos & Levine, 1962; Muller, 1937; Dyke and Dolan, 1956; Van Oostrom, 1966; Burgess; Kroemer and Houston, 1953; Gadzuk and Plummer, 1973)

1.2. Simple Field Emission Microscope

The Field emission phenomenon was first utilized in 1936 by Muller (Muller, 1937) who constructed a simple field emission microscope using a sharp metal as a cathode (called a tip) and a fluorescent screen as an anode as shown in Fig. 1. Fig. 2 shows in more detail how to construct practically the field emission microscope. Hashim (2023) covers a detailed description of this device.

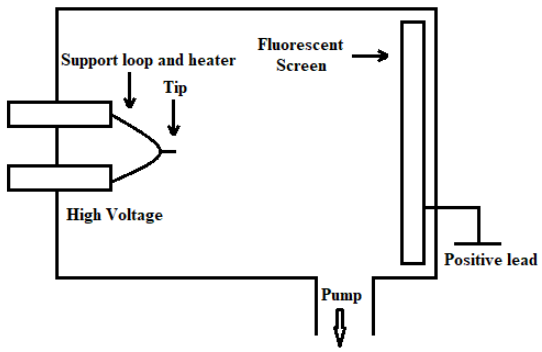

Fig.1. Experimental set – up of the FEM.

© 2024 University of Benghazi. All rights reserved. ISSN 2663-1407; National Library of Libya, Legal number: 390/2018

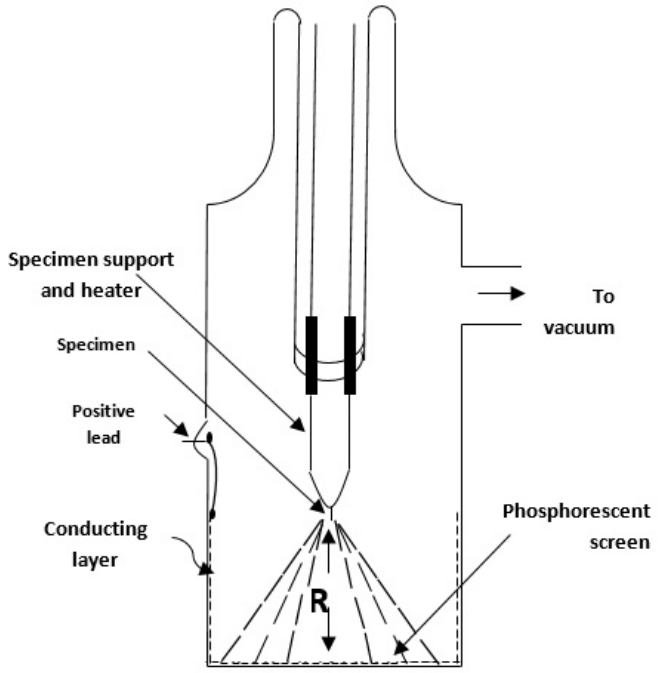

Fig.2. A simple field emission microscope

This instrument was the first tool used to study surface science, it requires a high–vacuum technique to achieve and give good results. It has contributed to understanding the field emission itself; in addition to that, it has helped to study surface phenomena not previously accessible to direct observation (Dyke and Dolan, 1956). It was the first instrument, which showed with a large magnification (10^5 to 10^6 and good resolution (≈20A^0), the field emission patterns from clean metal surfaces (Muller, 1937). Fig. 3**,** for example, shows the field emission pattern from a clean Tungsten (Gomer, 1979) and Fig. 4 shows the field emission pattern from a clean Iridium. It is worth saying here that every substance has its unique pattern, which is not seen in any other substance like the fingerprints of the human being. The field emission microscope can detect the surface contamination of the emitter and thus it can provide new criteria for surface cleanness and make possible meaningful studies of surface diffusion (Gomer, 1978).

Fig. 3. Field emission patterns from clean tungsten.

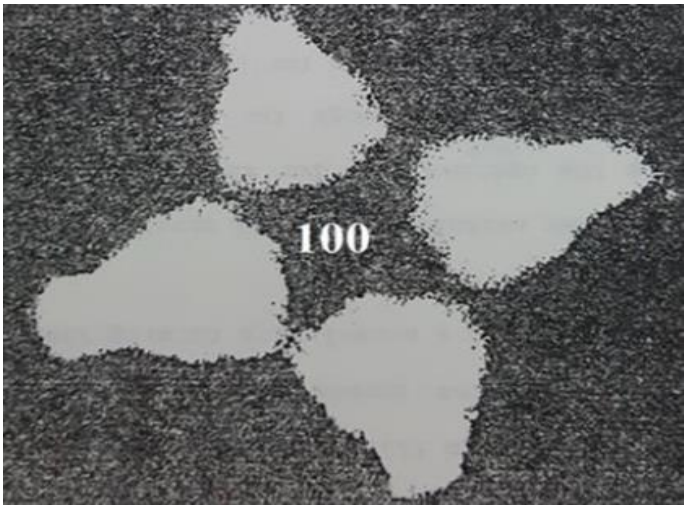

Fig. 4. Field emission patterns from clean iridium.

The development of ultrahigh vacuum (UHV) techniques helped to widen the study of surface phenomena by using the field emission microscope, which can also be used to estimate the adsorbate film thickness (Hashim, 2018). These properties of the field emission microscope made it a unique and very powerful tool for the study of surface phenomena. Magnification (M) of the microscope is given by Eq. (2):

$$M = \frac{R}{r} \tag{2}$$

where R is the emitter to screen distance and r is the radius of the emitter.

1.3. The Probe-Hole Field Emission Microscope

The disadvantage of the simple field emission microscope is that most of the electrons emitted from the whole surface of the tip come from the bright, atomically rough regions that have low work function values. These regions mask the effect of the weakly emitting regions that are atomically smoother and so have high work function values (Jones, 1965; Bassett, 1965)

This disadvantage was overcome when Muller (Muller, 1955) introduced the probe-hole microscope by placing a small hole in the anode and allowing the emitted current of a selected hkl plane to reach the collector thus permitting a detailed examination of the individual low index planes on the tip surface. A detailed description of this device is covered by Hashim (2023). The hkl plane of interest can be selected by mechanical (Muller, 1955), magnetic (Van Oostrom, 1966), or electrostatic (Plummer and Young, 1970) deflection of the image and the transmitted current is collected by an electrode sited behind a hole in the centre of the screen. The instrument was used by many authors to measure the work functions and the energy distributions of the emitted electrons (Dreschsler, 1978).

2. Theoretical review

2.1. The Fowler Nordheim Equation

Fig. 5 illustrates a one-dimensional potential energy diagram for an electron near a metal surface. Line (a) is the vacuum level and is higher than Fermi level by the amount φ. Line (b) is the image potential which arises due to force of attraction on an electron outside the metal surface by its positive image inside the metal. Neglecting the image potential effect, an applied field (F) produces a triangular shaped barrier (Line c) which is thinner than the barrier in the absence of the field. Line (d) represents the effective potential barrier resulting from combining the effects of lines (b) and (c). It is thinner and lower (Schottky effect) than either than them.

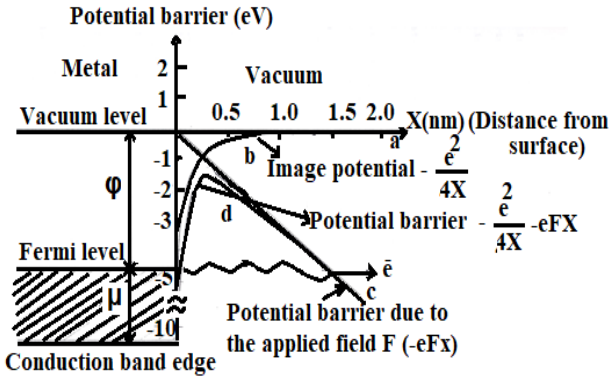

Fig. 5. Potential energy diagram for a metal surface in the presence of an applied electric field.

Electrons impinging on this modified barrier from inside the metal have a significant probability of penetrating it and appearing outside the metal. The occurrence of the field emission can be derived from Heisenberg's uncertainty principle. (Gomer, 1971). When dealing with the field emission microscope practically, the electron emission current (I) in amperes is measured as a function of the applied voltage (V) in volts between the cathode and anode. I and V can be expressed as

$$I = JA \quad \rightarrow J = \frac{I}{A} \tag{3}$$

where J is the current density in Amperes / cm², and A is the emitting area in cm² and

$$F = \beta V \tag{4}$$

where (β) has units of cm⁻¹ and depends on the geometry of the electron emitter (Martin *et al*, 1960). Substituting Eqs. (3) and (4) into Eq. (1) yields

$$I = 1.54x10^{-6}\frac{\beta^2 V^2 A}{\varphi t^2{}_{(y)}}\exp(-6.83x10^7\frac{\varphi^{\frac{3}{2}}}{\beta V}f(y)\,) \tag{5}$$

where t(y) and f(y) are other slowly varying functions whose values lie close to unity, their values are tabulated by many authors (Nordheim, 1928; Gyftopoulos and Levine, (1962); Muller, 1937; Dyke and Dolan, 1956; Van Oostrom, 1966). Rearranging Eq. 5 gives

$$log\frac{I}{V^2} = \log\,(1.54x10^{-6}\frac{\beta^2 A}{\varphi t^2{}_{(y)}}) - 2.96\,x\,10^7\frac{\varphi^{\frac{3}{2}}}{\beta V}f(y) \tag{6}$$

Plotting $log\frac{I}{V^2}$versus $\frac{1}{V}$results in a straight-line graph called the Flower-Nordheim (FN) plot. The slope of this Plot (S_{FN}) is given by Gomer (Gomer, 1967):

$$S_{FN} = \frac{d(log\frac{I}{V^2})}{d\,(\frac{1}{V})} =) - 2.96\,x\,10^7\frac{\varphi^{\frac{3}{2}}}{\beta}S(y) \tag{7}$$

where S(y) is another slowly varying function whose value also lies close to unity.

To get appreciable electron emission from the tip surface, a field of 3 to 6×10⁶ V/cm is required. A convenient method of obtaining fields of this magnitude is to electrolytically etch a fine metal wire to a sharp point having a very small radius (100 to 2000 A⁰). Hashim (2020) has given a good description about the etching processes of metals to get sharp-ended tips. Since the field $F = \frac{V}{r}$ where r is the radius of the emitter end, quite modest voltages are enough to produce the required fields.

3. Applications

3.1. Measuring the Work Function of the Metals.

The work function, which is defined as the minimum energy the electron needs to depart the metal's surface and appear outside of the metal surface is a very important concept in many physical and engineering applications involving electron emission from metals as in the case of the cathode ray tubes, in photoelectric devices, it is also used to understand the electronic behavior of metals, semiconductors, and insulators. Moreover, the work function is also important in determining the efficiency of electronic devices. Some of these devices are photovoltaic cells, field-effect transistors, and thermionic converters, and in many other applications. The symbol for the work function is Φ. Platinum is known to have the highest work function value of 6.35 eV, while cesium has the lowest value of 2.14 eV.

The simple field emission microscope can be used to measure the work function of the emitter surface when it is covered by the adsorbate atoms. The work function of a pure substance can be measured by other methods like the photoelectric effect. The probe-hole microscope can be used to measure the work function of the individual planes of the emitter surface (φhkl).

To measure the change in the work function of the whole surface of the emitter, Eq. (8) is used as follows:

$$\varphi_{ads} = \varphi_{cln}\left(\frac{S_{ads}}{S_{cln}}\right)^{\frac{3}{2}} \tag{8}$$

where φ_{ads}, S_{ads}, $\varphi_{cln,}$ *and* S_{cln} are the average work functions and FN slopes for the adsorbate-covered and clean surfaces respectively.

To measure the work function of the individual planes of the emitter surface, Eq. (9) is used as follows:

$$\varphi_{hkl} = \varphi_{tot}\left(\frac{S_{hkl}}{S_{tot}}\right)^{\frac{3}{2}} \tag{9}$$

where φ_{hkl}, S_{hkl}, $\varphi_{tot,}$ *and* S_{tot} are the work functions and FN slopes for the hkl plane and the total surfaces respectively. For example, Iridium individual planes have different work function values of about 4.7 eV to about 5.7 eV. The electron work function of an oriented single crystal is 5.50 eV for (100), 4.85 eV for (110), and 5.74 eV for (111) (Shabalin, 2014). Hashim (2010) measured the work function of the (100) plane of iridium using Eq. (9) and by assuming the average work function value for iridium to be 5.27 eV, he found that φ_{100}has a value of 6.00 ∓ 0.02 eV.

3.2. Adsorption

Another important application of the field emission microscope is the study of adsorption phenomenon at the metallic cathode surface. Such studies provide a powerful technique to deal with the problems in catalysis and surface chemistry. A low work function surface which is of technological interest can be obtained by the co-adsorption of gas which decreases the emitter work function below that due to adsorption of the metallic adsorbate alone. Thus, the understanding of the adsorption is a prerequisite to the development of a method for controlling the electrical behaviour of the cathode for use in practical electronic devices (Dyke and Dolan, 1956).

Adsorption can be divided into two categories (Gomer, 1971), physical adsorption (physisorption) and chemisorption. In the first type the forces involved in adsorbate-substrate bonding are weak and the binding energies are of the order of 0.1 to 0.5 eV. In chemisorption a stronger bond between the adsorbate and substrate is formed, the adatom sharing electrons with the substrate (Dyke and Dolan, 1956). The usual chemical bonds between the atoms in a molecule may be broken and replaced by equivalent bonds with the substrate, resulting in a chemical reaction at the cathode surface. The resulting layer often has an electric dipole, which has a marked effect on the work function and hence on field emitted current. Metallic adsorption falls in the second category.

Field emission microcopy is not the only technique used to study the adsorption phenomenon. Adsorption can be studied by other techniques like Field Ion Microscopy (FIM), Auger Electron Spectroscopy (AES), low Energy Electron Diffraction (LEED), a

scanning field emission microscope (SFEM), and photoelectron emission microscopy (PEEM). A comprehensive review of the many techniques used to study the adsorption phenomenon hadbeen given by Gomer (Gomer, 1967).

3.3. Desorption

Desorption is the removal of an adsorbate from a tip surface, it is a reaction in which the bonds between the surface atoms and the adsorbate atoms are broken (Schmidt and Gomer, 1966). There are two methods of desorption, field desorption and thermal desorption. In field desorption a high positive voltage is applied to the tip, the adsorbate atoms are evaporated in the form of positive ions when the applied field is increased to a sufficiently high value ($\approx 10^8$ volts / cm). In thermal desorption, on the other hand, the tip is heated to a temperature high enough to make the adsorbate atoms depart the tip surface. The required temperature to achieve thermal desorption is approximately half to two-thirds the melting point of the tip substance which make the adsorbate atoms to evaporate (Bettler and Barnes,1968).

4. Discussion.

4.1. Adsorption Effects on φ

4.1.1. Variation in φ for Pure Metals

The work function φ is an important parameter in electron emission. Its value depends on the nature of the surface structure and so different metals have different values of φ, and different planes of the same surface have different values of φ (Muller, 1955). For densely packed surfaces, the values of φ are high, while for the atomically rough surface with more open structures the values of φ are low.

4.1.2. Changes in φ with Coverage of Adsorbate

The adsorption of dissimilar atoms on the surface of a metal induces a change in φ in a way which depends on the nature of the adsorbate and substrate (Gyftopoulos and Levine, 1962); (Gomer, (1961); (Flaim & Ownby, 1972). The change in φ due to adsorption at low coverage is mainly attributed to the formation of adsorbate substrate dipoles (Gomer, 1961) at the surface of the emitter. Depending on the electro-negativities of both the substrate (the field emitter or the tip) and of the adsorbate, the formed dipole can be in a way either the positive part is at the surface or the negative part.

In the first case, the dipole will cause the work function of the system to decrease because of the attraction force between the emitted electrons and the positive part of the dipole. In the second case, the work function of the system will increase because of repulsion forces between the emitted electrons and the negative part of the dipole. For example, if gold atoms which have an electronegativity of 2.4 are adsorbed on an iridium surface which has an electronegativity of 2.2 4 (Pauling, 1960), an iridium–gold dipole will be formed in which gold is negatively charged with respect to iridium and this causes higher work function of the system. Hashim (2018) has investigated this system. When copper which has an electronegativity of 1.9 is adsorbed on iridium, a copper-iridium dipole is formed in a way that copper is positively charged with respect to iridium which results in a decrease in system work function, see Hashim (2017).

4.2. Desorption.

4.2.1. Thermal Desorption.

As mentioned in section 3.3, desorption is the removal of an adsorbate from a tip surface. Thermal desorption is widely used to measure the activation energy of removing the adsorbate atoms from the field emitter surface. Desorption is a reverse process of adsorption, while the adsorption is a process in which the adsorbate atoms are adsorbed and spread on the emitter surface, the desorption process removes them. Many authors studied the desorption process and measured the activation energies for different adsorbate–substrate systems. Desorption of copper from the iridium surface at five different temperatures has been investigated by Hashim (Hashim, 2023) and the activation energy of this process was measured to be in the range 3.30 ∓ 0.02 eV to 4.00 ∓ 0.05 eV depending on the desorption temperature.

5. Conclusion.

In this study we have introduced some information about an important and powerful technique used extensively in investigating the surface phenomena of metals including the electronic structure of the surface, the adsorption of metal atoms of different substances (metal and gases) on the tip surface and measure the changes of the work function of different adsorbate – substrate systems and the study of surface diffusion.

This important technique is field electron emission microscopy and the used device is the field emission microscope (FEM). The article has also covered the principles of this technique, its theory, and its applications. The most important application is the adsorption. Thermal desorption of the adsorbed atoms from the tip surface at different temperatures provides a method to measure the activation energies required to remove those atoms from the tip surface.

References

Bassett, D.W. (1965) 'The thermal stability and rearrangement of field-evaporated tungsten surfaces', *Proc. Roy. Soc. London*, A286, pp. 191-203.

Bettler P.C., Barnes G. (1968), 'Field Emission Studies of Surface Migration for Tungsten, Rhenium, Iridium, and Rhodium', *Surface Science*, 10, pp. 165-176.

Burgess R.E., Kroemer, H., Houston, J.M. (1953) 'Corrected Values of Fowler-Nordheim Field Emission Functions v(y) and s(y)', *Phys. Rev.*, 90, pp. 515–516.

Cutler, P.H., Nagy, D. (1965) 'The use of a new potential barrier model in the Fowler-Nordheim theory of field emission', *Surface Science*, 3, pp. 71-94.

Dreschsler, M. (1978) 'The early development of field emission microscopy', *Surface science*, 70, pp. 1 – 18.

Dyke, W.P., Dolan, W.W. (1956) 'Field Emission', *Advances in electronics and Electron Physics*, 8, pp. 89–185.

Flaim, T.A., Ownby, P.D. (1972) 'Adsorbate-induced work function changes', *Surface Science*, 23 pp. 519 – 526.

Fowler, R.H., Nordheim, L.W. (1928) 'Electron Emission in Intense Electric Fields', *Proc. Roy. Soc. London*, A119, pp. 173-181.

Gadzuk, J.W., Plummer, E.W. (1973) 'Field Emission Energy Distribution (FEED)', *Rev. Mod. Phys.*, 45, pp. 487–552

Gomer, R. (1961) Field Emission and Field Ionization. Harvard University Press, 1961.

Gomer, R., (1967) Fundamental of Gas - Surface Interactions. Academic Press, N. Y. and London.

Gomer, R., (1971) Field Emission and Field Ionization. Harvard University Press.

Gomer, R., (1978) 'Applications of field emission to chemisorption', *Surface Science*, 70, pp. 19 -31.

Gomer R. (1979), 'Recent applications of field emission microscopy', *Critical Reviews in Solid State and Materials Sciences*, 8:2, pp. 119-134.

Gossling, B.S., (1926), 'The emissions of electrons under the influence of intense electric fields', *Phil. Mag.*, 1, pp. 609-635.

Gyftopoulos, E.P., Levine, J.D. (1962) 'Work Function Variation of Metals Coated by Metallic Films', *J. Appl. Phys.* 33, pp. 67-73.

Hashim K.I. (2017), 'Adsorption of Copper on Iridium', Science and its applications 5:2, pp. 103–105.

Hashim, K.I. (2018) 'Estimation of Copper, Silver, and Gold Coverages on Iridium Field Emitter Tip Surface', *World Journal of Engineering and Technology*, 6, pp. 556 – 566).

Hashim, K.I. (2020) 'Measuring the work function of the (100) plane of Iridium electron emitter by probe hole field electron emission microscope', *Libyan Journal of Science and Technology*, 12, 1, pp. 197-203.

Hashim, K.I. (2023), 'Thermal Desorption of Copper from Iridium Surface', Libyan Journal of Science and Technology, 14:2, pp. 79-84.

Jones, J.P. (1965) 'The Adsorption of Copper on Tungsten', *Proc. Roy. Soc. London*, A284, pp. 469-487.

Martin, E.E., Trolan, J.K., Dyke, W.P. (1960) 'High Density Field emission Cold Cathode', *J. App. Phys*., 31, pp. 782-789.

Muller, E.W. (1937) 'Field Ionization and Field Ion Microscopy', *Z. Physik*, 106, pp. 541–550.

Muller, E.W. (1955) 'Work Function of Tungsten Single Crystal Planes Measured by the Field Emission Microscope', *J. Appl. Phys*., 26, pp. 732–737.

Nordheim, L.W. (1928) 'The Thermal and Electrical Variations Temperatures', *Proc. Roy. Soc. London*, A121, pp. 626 – 639.

Pauling, L. (1980) The Nature of Chemical Bond. Cornell University Press, Ithaca.

Plummer, E.W., Young , R.D , (1970),'Field-Emission Studies of Electronic Energy Levels of Adsorbed Atoms', Phys. Rev. B 1, pp. 2088 – 2109.

Schmidt, L., Gomer, R. (1966), 'Adsorption of Potassium on Tungsten, Measurements on Single- Crystal Planes', *J. Chem. Phys*., 45, pp. 1605 – 1623.

Shabalin, I.L. (2014) Ultra–High Temperature Materials I, Carbon (Graphene/Graphite) and Refractory Metals. A comprehensive Guide and Reference Book, Springer Dordrecht Heidelberg New York London.

Van Oostrom A. (1966) 'Validity of Fowler–Nordheim Model for Field Emission', *Philips Research Reposts Suppl*., 1, pp. 1-102.

Wang, J., Wang, S. (2014), 'Surface energy and work function of fcc and bcc crystals: Density functional study', *surface Science*, 630, pp. 216–224.

Wood, R.W. (1897) 'A New Form of Cathode Discharge and the Production of X-Rays together with Some Notes on Diffraction', *Phys. Rev*., 5, pp. 1-10.