Libyan Journal of Science & Technology 15:2 (2025) 223-228

Faculty of Science - University of Benghazi

Libyan Journal of Science & Technology

journal home page: https://journals.uob.edu.ly/LJST

Studying and Simulating the Physical Solar Cell by Mathematical Modeling

Mahmoud A. Ahmida[a,*], Farag G. Boukhrias[b], Ahmed M. El Menshaz[c], Muhsen Z. Elfituri[d], Abdlmanam S. Elmaryami[e]

[a] *Department of Physics, School of Basic Sciences, Libyan Academy for Postgraduate Studies, Ajdabiya, Libya.*

[b] *Department of Physics, University of Ajdabiya, Ajdabiya, Libya.*

[c] *Department of Physics, University of Ajdabiya, Ajdabiya, Libya.*

[d] *Department of Physics, University of Benghazi, Benghazi, Libya.*

[e] *Department of Mechanical Engineering, the Bright Star University, El-Brega, Libya.*

Highlights

- **The present study presents a general mathematical model of a photoelectric collector.**
- **The Simulink software was used to simulate the mathematical model of the solar cell.**
- **Results, which could be used for a variety of solar photovoltaic investigations, were quite accurate, with a maximum error of less than 1%.**

ARTICLE INFO

Article history:

Received 03 August 2024
Revised 08 December 2024
Accepted 09 January 2025

Keywords:

Photovoltaic, Semiconductor, Conductors, Devices, Temperature, Solar cell, Manufacturer's, Mathematical Modelling.

**Address of correspondence:*

Email address:

mahmoud.ahmida@academy.edu.ly

M. A. Ahmida

ABSTRACT

This research presents a general mathematical representation of a photoelectric collector, which could be used in solar collector research and applications. This model has the benefit of being based on the specifications for the photoelectric collector stated in the manufacturer's advisory. The Simulink software was used to simulate the mathematical model of the solar cell. The properties of the photodiode and characteristic curves were established using simulation. The results, which could be used for various solar photovoltaic investigations were quite accurate with a maximum error of less than 1%. The most essential characteristic of photovoltaic systems is that a new plant can be designed, built, and operated quickly; static systems do not have moving parts, so there is no noise. Due to the lack of moving parts, it can last for a long time and requires minimal maintenance.

1. Introduction

The Energy Union's Strategic Plan aims to shift the economy away from fossil fuels and toward renewable energy and energy products (Cucchiella *et al*., 2017). Solar energy is the most plentiful and fully exploitable renewable energy source, particularly in southern Europe (Sansaniwal *et al*., 2018; Li *et al*., 2017; Teo *et al*., 2018). Implementing circular economy techniques might result in a 70% reduction in carbon emissions in five European economies by 2030, according to a study conducted by the Club of Rome (Jacobi *et al*., 2018). One strategy to accomplish the objectives of the Energy Union Framework would be to focus on both a circular economy and a renewable energy economy (Cucchiella *et al*., 2017).

The mathematical modelling of the Photovoltaic (PV) module is updated regularly to help academics better grasp how it functions. The models are different based on the kinds of software that the researchers utilised, including the toolboxes they designed, Matlab, Excel, C-programming, and Simulink. Photovoltaic (PV) module arrays are considered as energy conversion devices in photovoltaic systems. The photovoltaic array has non-linear properties, is expensive, and requires a considerable amount of time to obtain the working curves under various operating situations. A general and basic model of solar panels is designed to overcome these challenges, and they have been incorporated into a number of engineering software packages, such as Matlab and Simulink (Nguyen *et al*., 2015).

The photovoltaic cell is an essential part of any solar system. Photovoltaic cells are large-area semiconductors, in actuality. Electrical signals are produced from photon energy using photovoltaic cells. Photovoltaic systems are becoming more and more common in both small and large energy production since this technique of producing electricity does not impact the ecology (Nguyen *et al*., 2015). Numerous papers in this context display various trends. The single- and double-diode variants are the most often utilized. The simplicity and usability of the single-diode model across a variety of software programs make it popular. This "model with five parameters" features a photocurrent source parallel to the diode, as well as shunt resistance. For determining the behavior of photovoltaic cells at different temperatures and solar levels, a comprehensive single diode model was presented (Abdulgafar *et al*., 2014). The current-voltage and power voltage define how a solar cell behaves in reaction to changes in temperature, solar irradiance, and specific physical parameters like shunt and series resistance. By 2030, solar cells might supply around 13% of the world's electricity, according to maps created in 2016 (Chenni *et al*., 2007).

© 2024 University of Benghazi. All rights reserved. ISSN 2663-1407; National Library of Libya, Legal number: 390/2018

Many techniques have been used to create solar cell models. These techniques fall into two categories: indirect and direct. Numerical solutions to equations are found in some mathematics and engineering problems by using direct approaches (e.g., Newton's method) and indirect methods (e.g., heuristics and metaheuristics for estimating five, seven, and eight parameters) (Louzazni *et al.*, 2018; Argyros, 2009). The primary part of solar panels is the solar cells. Multiple solar cells coupled in series and parallel make up photovoltaic modules. A solar cell with just one current source, a diode, and two resistors can be used to duplicate this. This type of solar cell is called a diode model. It is also possible to use two diode models, but only one diode model is considered here (Argyros, 2008; Boukhrais *et al.*, 2021; Oi, 2005; Hernanz *et al.*, 2010; Mohammed, 2011; Villalva *et al.*, 2009; Satpathy, 2011 & 2012; Rusirawan *et al.*, 2012; Ulapane *et al.*, 2012; Pandiarajan *et al.*, 2011).

2. Characteristic Curve I-V

Fig. 1 shows the typical values of short-circuit current I_{sc} V = 0 and open-circuit voltage V_{oc} I = 0. Additionally, we can notice point A in the Figure , which stands for the operating point with the highest PMAX capacity.

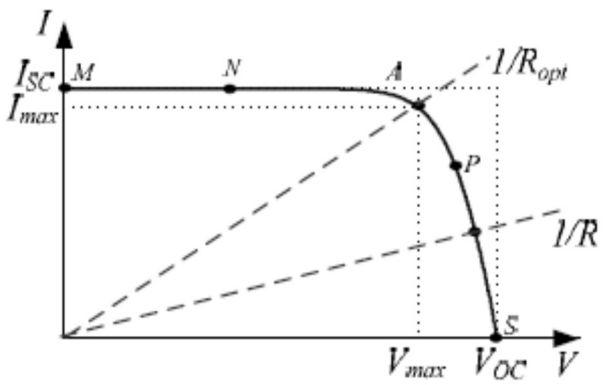

Fig. 1. Current-Voltage (I-V) curve for a solar cell (Jalil *et al.*,2012).

3. Modification of a PV Module

Photovoltaic modules are composed of many solar cells that are coupled in series and parallel to generate the necessary output voltage and current levels. All solar cells function as p-n diodes. Every single solar cell serves the same purpose as a p-n diode. Without any help, incident energy from the sun's beams is directly transformed into electrical energy when it strikes the solar cell. This work employs the single-diode model from Fig. 2 for the sake of simplicity. The straightforward design of the model, which consists of a current source and a parallel diode, allows it to strike an appropriate balance between simplicity and accuracy. The corresponding electrical circuit is depicted in Fig. 2. To represent the dissipative processes in the cell (internal losses), two resistors are added to the model: a series resistor (R_S) and a parallel (shunt) resistor (R_{SH}).

R_S: Series resistor, due to Joule effect losses and the semiconductor's particular resistor, as well as weak connections (Semi-conductor, electrodes).

R_{SH}: The term 'Shunt' refers to recombination losses caused by the junction's thickness, surface effects, and non-ideality.

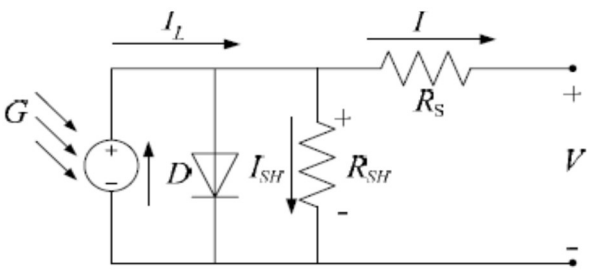

Fig. 2. The photovoltaic module's circuit diagram.

4. Photovoltaic Module Equations

Photovoltaic arrays, composed up of additional parts known as photovoltaic modules, are created by connecting photovoltaic cells in a series-parallel configuration. The fundamental equations from photovoltaic and semiconductor theory that quantitatively explain the I-V properties of the solar cell and module are listed below. Consequently, we have according to Kirchhoff's law:

$$I = I_{ph} - I_d - I_P \quad \text{.....(1)}$$

I represents the light-generated current under ideal circumstances (25^oC and $1000\frac{W}{m^2}$). The following equation indicates that temperature and solar radiation have a linear effect on the current source I_{ph} (Pandiarajan *et al.*, 2012).

$$I_{ph} = \left[I_{Scr} + K_i(T_k - T_{raf})\right]\frac{G}{1000} \quad \text{..... (2)}$$

where: I_{SCr} is the value of the module short-circuit current, K_i is the temperature coefficient of the cell's short-circuit current, the cell's operating temperature is T_k, and its reference temperature is T_{raf},. G is the surface solar radiation of the cell. (W/m^2).

I_P : is the shunt current, I_d : Diode Current, it is given by:

$$I_d = I_0\{\exp\left(\frac{qVD}{AK_T}\right) - 1\} = I_0\{\exp\left(\frac{q(V+RsI}{AK_T}\right) - 1\} \quad \text{.....(3)}$$

where, k is the Boltzman constant, while the electron charge constant is q, T is the temperature in Kelvin

The diode's saturation current, or I_0, is determined by:

$$I_0 = I_{rs}\left[\frac{T}{T_r}\right]^3 exp\left[\left(\frac{qE_{go}}{AK}\right)\left(\frac{1}{T_r} - \frac{1}{T}\right)\right] \quad \text{.....(4)}$$

The reverse saturation current, or I_{rs}, is determined by:

$$I_{rs} = \frac{I_{scr}}{\exp[qV_{oc}/\ NsKAT] - 1} \quad \text{.....(5)}$$

where, A is the ideality factor of the cell, q is the electron charge, V_{oc} is the Solkar module open-circuit voltage, E_{go} is the bandgap energy of the semiconductor ($E_{go} \approx 1.1\ eV$ for the polycrystalline Si at 25°C).

Eq. (1) is substituted into Eq. (3) to obtain the following characteristic equation:

$$I = N_p I_{ph} - N_p I_0\left[exp\left(\frac{q(V + R_{sI}}{N_s AKT}\right) - 1\right] - \frac{V + R_{sI}}{R_p} \quad (6)$$

where, the number of series and parallel cell connections in a solar module is represented by Ns and Np, respectively ($Np = 1\ and\ Ns = 60$), R_p approaches infinity, while Rs approaches 0 in the ideal case. Because the resistance Rs is low, these resistors can be used to assess the diode's defects in the actual world and estimate its difficulties. The slopes of the I-V characteristics at I=0 open circuit and V=0 short circuit are used to compute the inverse values of series and shunt resistance, respectively.

5. Simulink Modelling of PV Module

To have a model to replicate how our connected cells function, Figs. 3 to 7 show a block diagram of a step-by-step model based on these equations in the Simulink environment.

5.1. First Step:

Fig. 3 shows a detailed Simulink model of Eq. (2) of photocurrent I_{photon}. The reference model's datasheet contains the value of the module short-circuit current (I_{scr}).

5.2. The Second Step:

Fig. 4. displays a comprehensive Simulink model of the reverse saturation current I_{rs} Eq. (5).

5.3. The Third Step:

For the PV module the output current I of the single-diode model is depicted in Fig. 2, a comprehensive Simulink model of equation (Teo *et al.*, 2018) is presented in Fig. 5. The inputs are the reverse saturation current, the reference temperature, and the module's operating temperature.

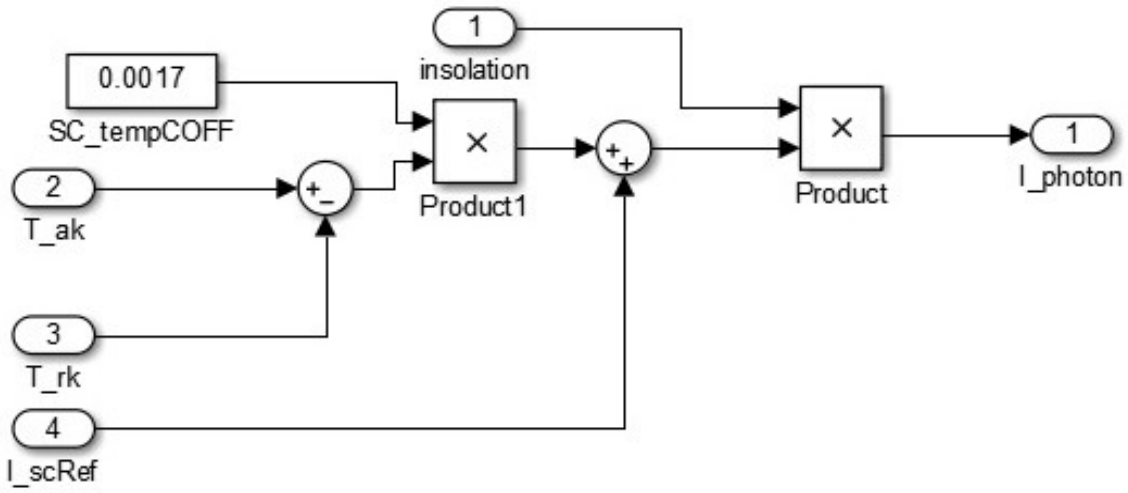

Fig. 3. Photocurrent (light generated current) is calculated using a Simulink block diagram.

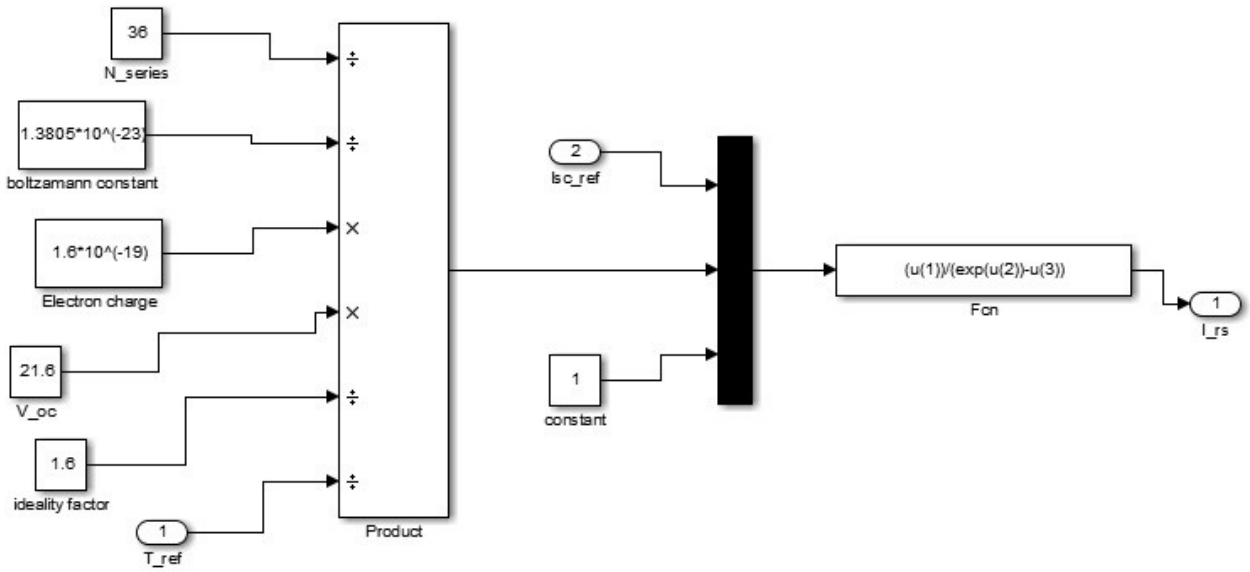

Fig. 4. Reverse saturation current is calculated using a block diagram.

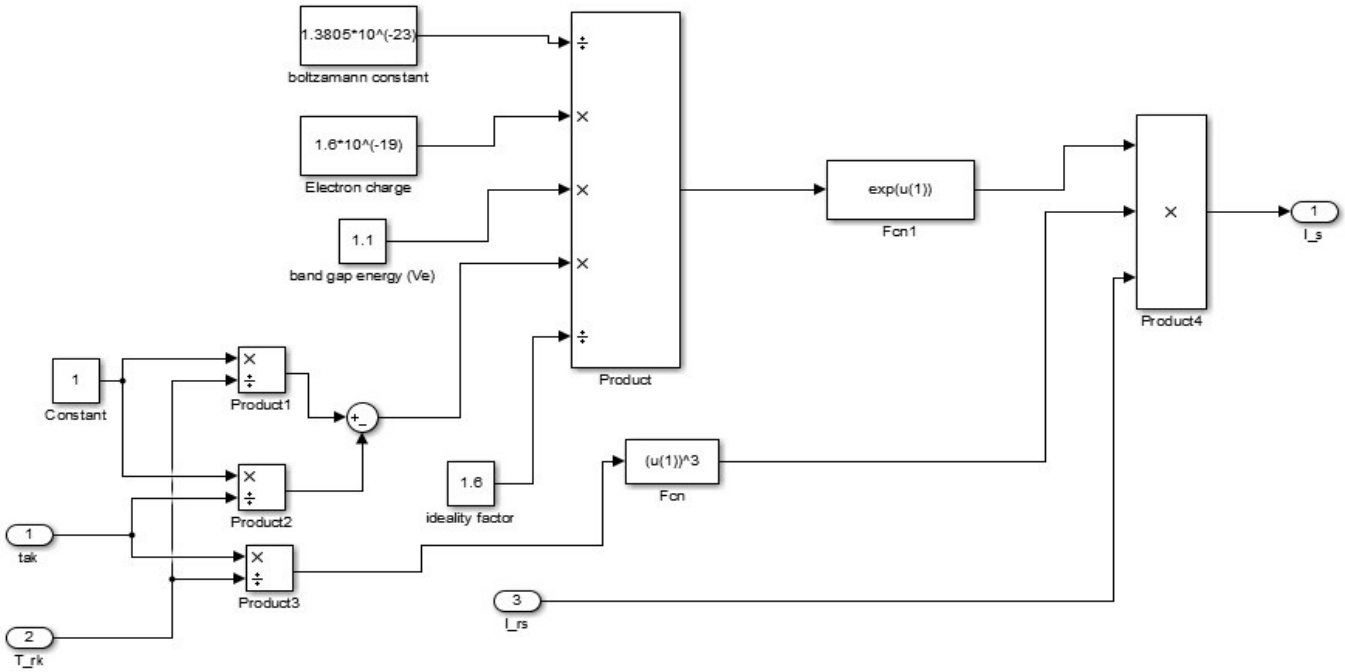

Fig. 5. A block diagram is used to compute saturation current

5.4. The Fourth Step:

The main equation describing the single-diode output current of the *PV* module (I) is Eq. (6). Fig. 1 shows how it looks. The lowest voltage or the smallest current flowing through the analog circuit's diode has the most effect on the parallel resistance. The fill factor and the open-circuit voltage are decreased when the parallel resistance is sufficiently low. No change is made to the short-circuit current.

The use of simple circuit models in this study makes the model suitable for power electronics designers who need a fast and accurate model to simulate solar energy devices with power converters. In order to keep the model simple, parallel resistance R_{SH}, whose value is often high, was not included in Eq. (7). The series resistance is generated by combining the structural resistances of the photovoltaic module. The series resistance is R_s (0.1 Ω), which is more significant as the power point approaches its maximum. In this study, R_{SH} is left out of the equation to make it simpler. As a result, equation 6 for *PV* module current output could be changed to:

$$I = N_p I_{ph} - N_p I_0 \left[exp\left(\frac{q(V + R_{sI})}{N_s AKT}\right) - 1 \right] \quad (7)$$

Iteration is required to solve Eq. (7), which uses Simulink to solve an algebraic loop. In an attempt to circumvent this issue, functional models are employed in photovoltaic studies to model photovoltaic modules. The output current *I* of the iterative Matlab and Simulink models is displayed in Fig. 6.

5.5. The Fifth Step:

A Simulink model of *I* for the photovoltaic module is created by linking all of the previous blocks. This model calculates *I* using inputs such as voltage V, operational temperature, and solar radiation.

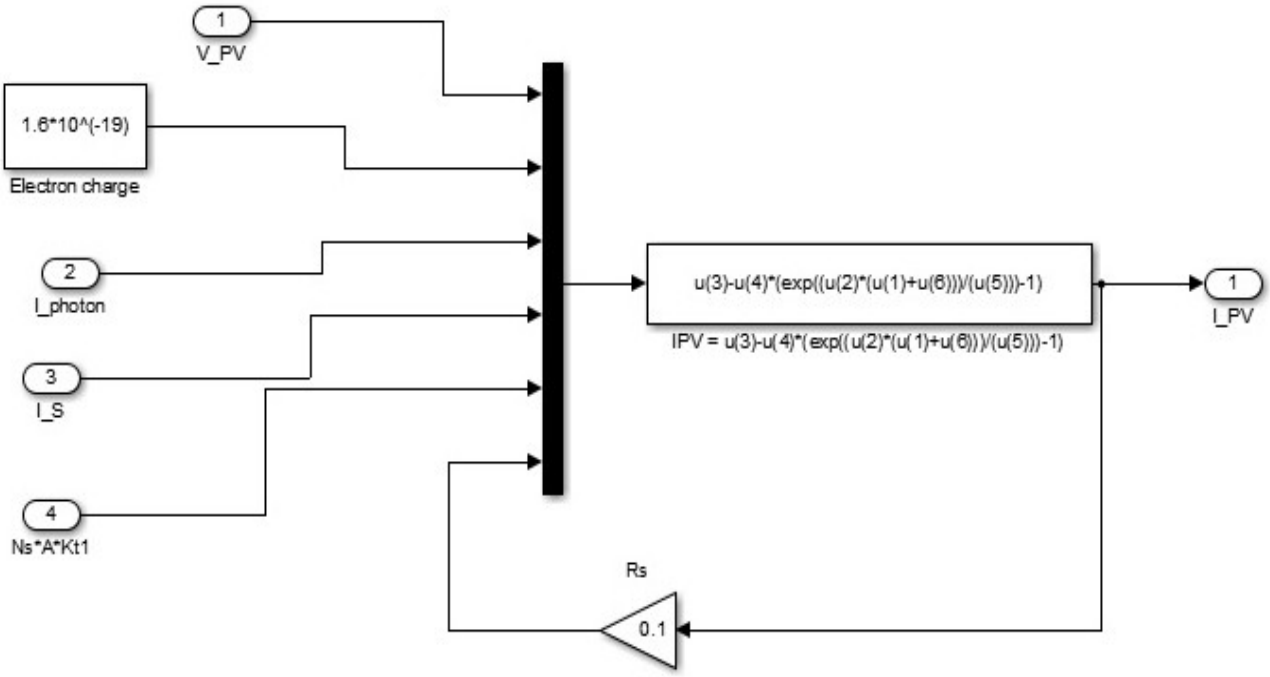

Fig. 6. Block Diagram of Output Current Calculation.

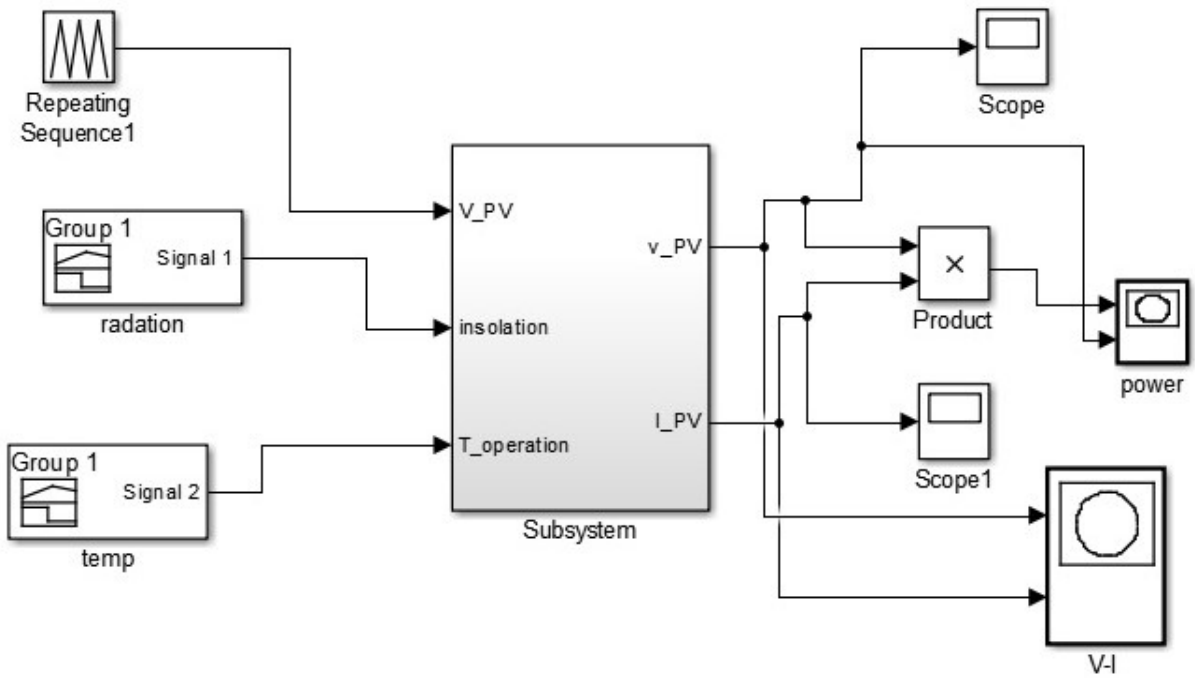

Fig 7. *PV* Module Simulink Model.

6. Simulation Result and Discussions

6.1. Effects of Solar Radiation on Characteristics of *PV* Modules

Fig. 8 illustrates how a photovoltaic cell responds to different solar radiation levels at a constant temperature of 25 °C temperature. It is clear that solar radiation substantially impacts short-circuit current but has minimal effect on open-circuit voltage. In Fig. 9, it is clearly observed that there is a maximum on the power curves, which corresponds to the Maximum Power Point Pmax. The cell produces more electricity when the sun radiation is high.

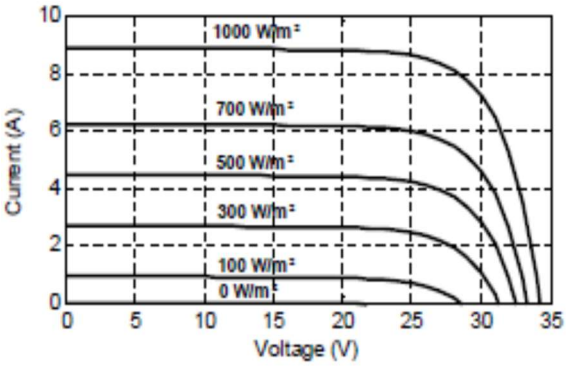

Fig. 8. Module's characteristics I -V at Constant Temperature (25 °C) with variation of Solar Radiation.

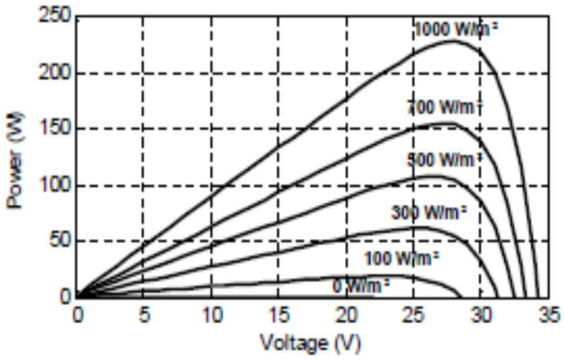

Fig. 9. Module's characteristics P-V at Constant Temperature (25 °C) with variation of Solar Radiation.

6.2. Effects of Temperature on Characteristics of PV Modules

Temperature plays a crucial role in how solar cells behave. Temperature has an impact on a generator's properties as well. The relationship between a module's characteristics, temperature, and solar radiation intensity are illustrated in Figs. 10 and 11 respectively. The essential factor in how solar cells behave is temperature. As can be seen, temperature significantly affects the open-circuit voltage but not the short-circuit current module's power. Figs. 10 and 11 show this. Lower temperatures cause the cell to produce more power. As demonstrated by the data above, temperature significantly affects voltage and power increase.

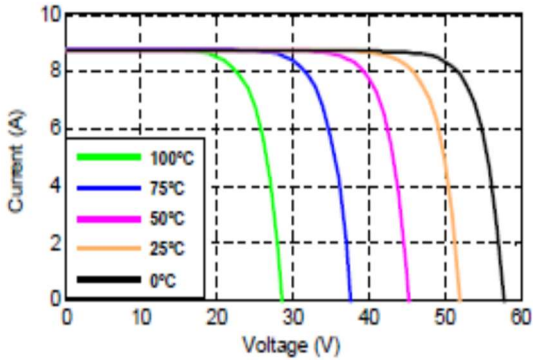

Fig. 10. Module's characteristics I-V at Constant Solar Radiation with variation of Temperatures.

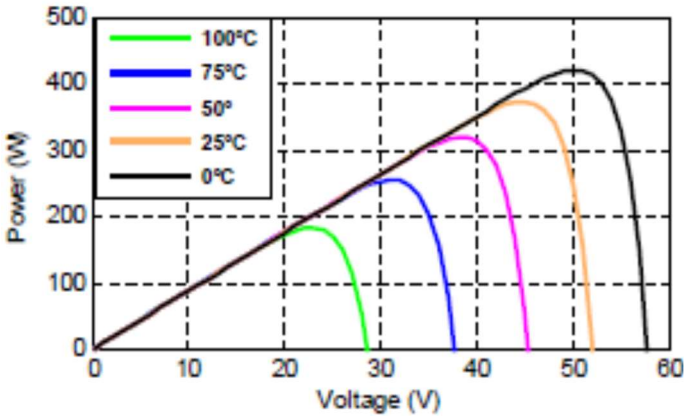

Fig. 11. Module's characteristics P-V at Constant Solar Radiation with variation of Temperatures.

7. Conclusion

Consequently, by investigating and simulating the cell's solar through mathematical modelling, we hope to inspire more researchers to engage in PV projects and to understand deeply the I-V and PV module properties, as an understanding of these curves is essentially necessary to properly evaluate photovoltaic systems. The effect of temperature and light intensity is illustrated in Fig. 10. As Fig. 10 shows, the operating mechanism of the cell is affected by temperature changes and reduces the resulting capacity. By preserving illumination intensity and enhancing cell efficiency, we contribute to the stimulation of electrons. In the case of Fig. 11, the cell's capacity increases with lower temperatures, whereas an increase in temperature reduces the cell's efficiency. To maintain the cell's efficiency, the temperature around the perimeter must be kept constant, and consideration should be given to cooling to some extent. the lower the temperature, the greater the capacity learned from the cell, and thus the increase in temperature affects the cell's efficiency.

Acknowledgements

The Libyan Academy for Postgraduate Studies in Ajdabiya, Libya, Bright Star University in El-Brega, and the University of Ajdabiya are all sincerely acknowledged by the authors.

References

Abdulgafar, S.A., Omar, O.S. and Yousif, K.M. (2014) 'Improving the efficiency of polycrystalline solar panel via water immersion method', International Journal of Innovative Research in Science, *Engineering and Technology*, 3(1), pp. 8127-8132

Argyros, I.K. (2008) 'On the Radius of convergence of Newton's method under average mild differentiability conditions', *Journal of Applied Mathematics and Computing*, 29, pp. 429-435

Argyros, I.K. (2009) 'Concerning the convergence of Newton's method and quadratic majorants', *Journal of Applied Mathematics and Computing*, 29, pp. 391-400

Chenni, R., Makhlouf, M., Kerbache, T. and Bouzid, A. (2007) 'A detailed modeling method for photovoltaic cells', *Energy*, 32(9), pp. 1724-1730

Cucchiella, F., D'Adamo, I. and Gastaldi, M. (2017) 'Economic analysis of a photovoltaic system: A resource for residential households', *Energies*', 10(6), p. 814

Farag G. A. Boukhrais, Ahmed M. Almnshaaz, Mahmoud A. Ahmida, Muhsen Zaydan, Makhlouf Elfituri (2021) 'A physical Studies Using Logic Gates Applications in Order to Develop the Work of a Pump on an Oil Transmission Line', *Globle Libyan Journal*, 53, pp. 1-16

Jacobi, N., Haas, W., Wiedenhofer, D. and Mayer, A. (2018) 'Providing an economy-wide monitoring framework for the circular

economy in Austria', Status quo and challenges. Resources', *Conservation and Recycling*, 137, pp. 156-166

Li, Q., Liu, Y., Guo, S. and Zhou, H. (2017) 'Solar energy storage in the rechargeable batteries', *Nano Today*, 16, pp. 46-60

Louzazni, M., Khouya, A., Amechnoue, K., Gandelli, A., Mussetta, M. and Crăciunescu, A. (2018) 'Metaheuristic algorithm for photovoltaic parameters: comparative study and prediction with a firefly algorithm', *Applied Sciences*, 8(3), p. 339

Mohammed, S.S. (2011) 'Modeling and simulation of photovoltaic module using mATLAB/simulink', *International Journal of Chemical and Environmental Engineering*, 2(5), pp. 1-6

Nguyen, X.H. and Nguyen, M.P. (2015) 'Mathematical modeling of photovoltaic cell/module/arrays with tags in Matlab/Simulink', *Environmental Systems Research*, 4, pp. 1-13

Oi, A. (2005) Design and simulation of photovoltaic water pumping system, In: Electrical Engineering, Master of Science in Electrical Engineering, California Polytechnic State University, San Luis Obispo, 113

Pandiarajan, N. and Muthu, R. (2011) 'Mathematical modelling of photovoltaic module with simulink', 1st *International Conference on Electrical Energy Systems, Chennai*, India, pp. 258-263

Pandiarajan, N., Ramaprabha, R., & Muthu, R. (2012) 'Application of circuit model for photovoltaic energy conversion system', *International Journal of Photoenergy*, pp 1-14

Ramos Hernanz, J., Campayo Martín, J. J., Zamora Belver, I., Larrañaga Lesaka, J., Zulueta Guerrero, E. and Puelles Pérez, E. (2010) 'Modelling of photovoltaic module', *International Conference on Renewable Energies and Power Quality*, Granada, pp. 23-25

Satpathy, S. (2012) Photovoltaic power control using MPPT and Boost converter, Ph.D dissertation).

Teo, J.C., Tan, R.H., Mok, V.H., Ramachandaramurthy, V.K. and Tan, C. (2018) 'Impact of partial shading on the PV characteristics and the maximum power of a photovoltaic string', *Energies*, 11(7), p. 1860

Ulapane, N., Abeyratne, S., Binduhewa, P., Dhanapala, C., Wickramasinghe, S. and Rathnayake, N. (2012) 'A simple software application for simulating commercially available solar panels', *International J. of Soft Computing and Software Engineering* (JSCSE), 2(5), pp. 48-68

Villalva, M.G., Gazoli, J.R., & Filho, E.R. (2009) 'Modeling and circuit-based simulation of photovoltaic arrays', Brazilian Power Electronics Conference, pp. 1244-1254